THIS DRAWING IS UNPUBLISHED. RELEASED FOR PUBLICATION -,- .
© COPYRIGHT - By - ALL RIGHTS RESERVED.

REVISIONS					
P	LTR	DESCRIPTION	DATE	DWN	APVD
	C	REVISED PER ECO-15-015252	13NOV15	BJ	FY

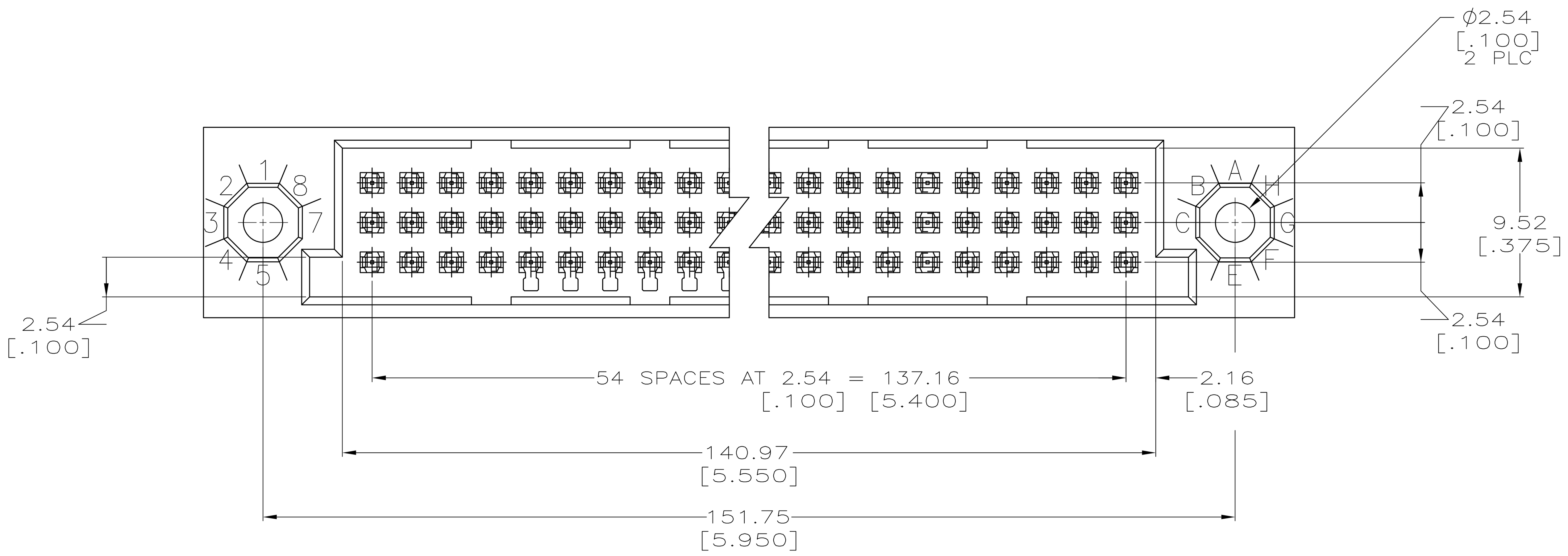

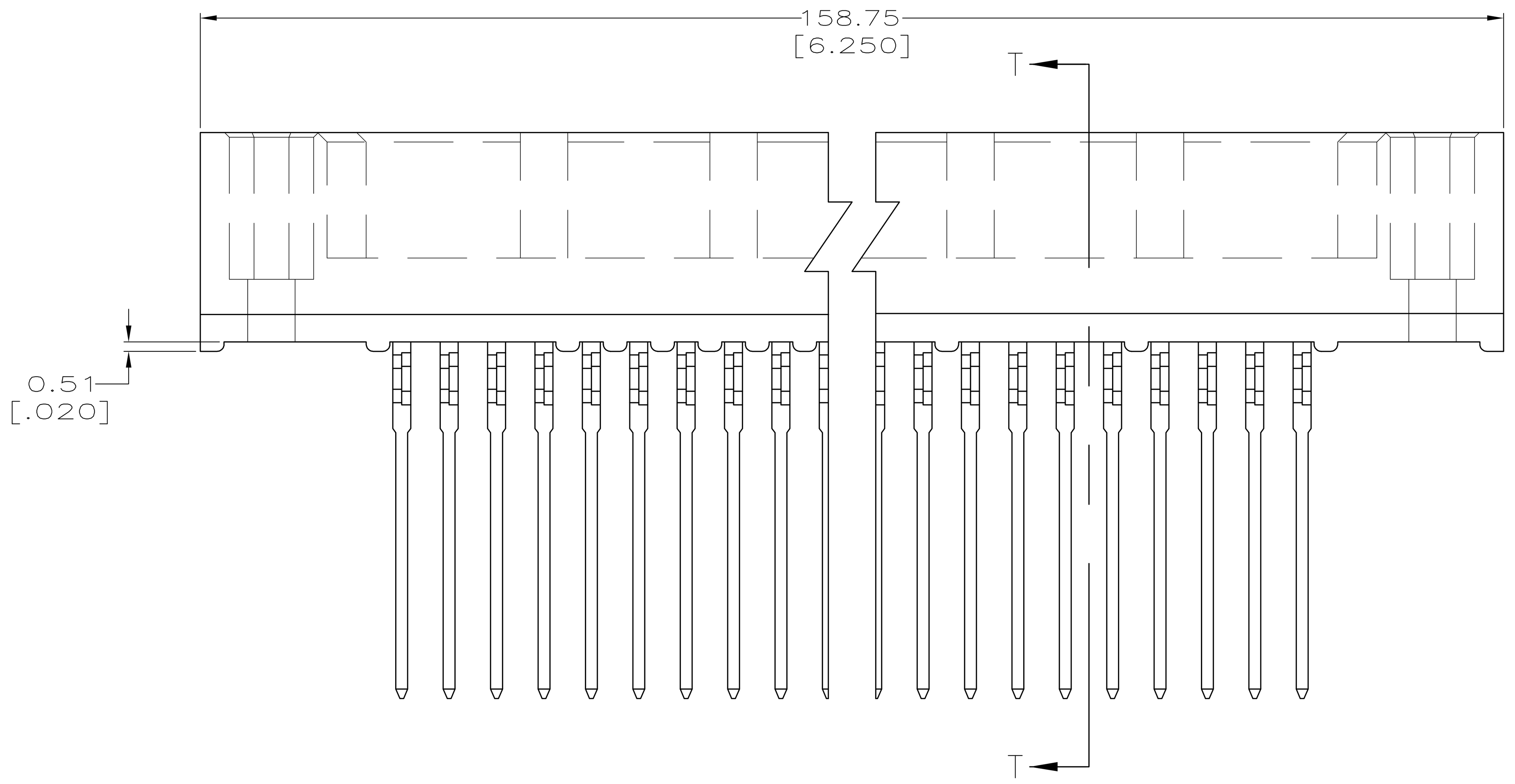

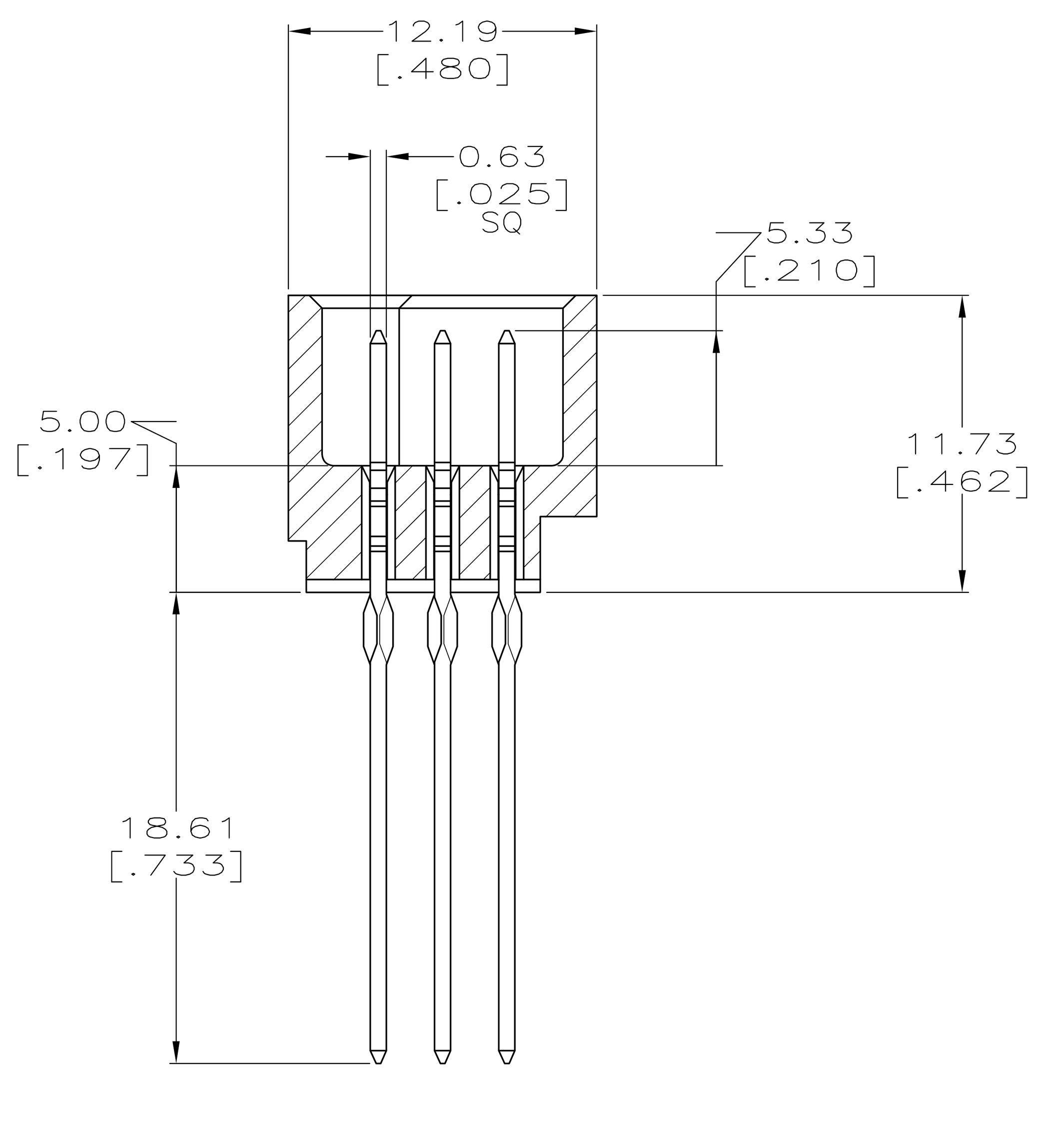

SECTION T–T

1\. HOUSING MATERIAL: THERMOPLASTIC, BLACK.

2\. CONTACT MATERIAL: PHOS. BRONZE.

3\. FINISH:
MATING AREA: MEETS THE PERFORMANCE REQUIREMENTS OF PRODUCT SPECIFICATION 108–9063; BASED ON TELCORDIA DR–1217–CORE APPLICATIONS IN UNCONTROLLED ENVIRONMENTS.
SOLDER TAILS AREA: TIN–LEAD PLATED.

4\. ACTION PIN POSTS REQUIRE 2.36[.093] MIN THICK P.C. BOARD. RECOMMENDED P.C. BOARD HOLES ARE 1.151 [.0453] DIA PLATED THRU WITH 0.025–0.076 [.001–.003] COPPER, WITH 0.0076 [.0003] MIN TIN–LEAD PLATING, FINISHED HOLE AFTER PLATING 0.94–1.09 [.037–.043] DIA.

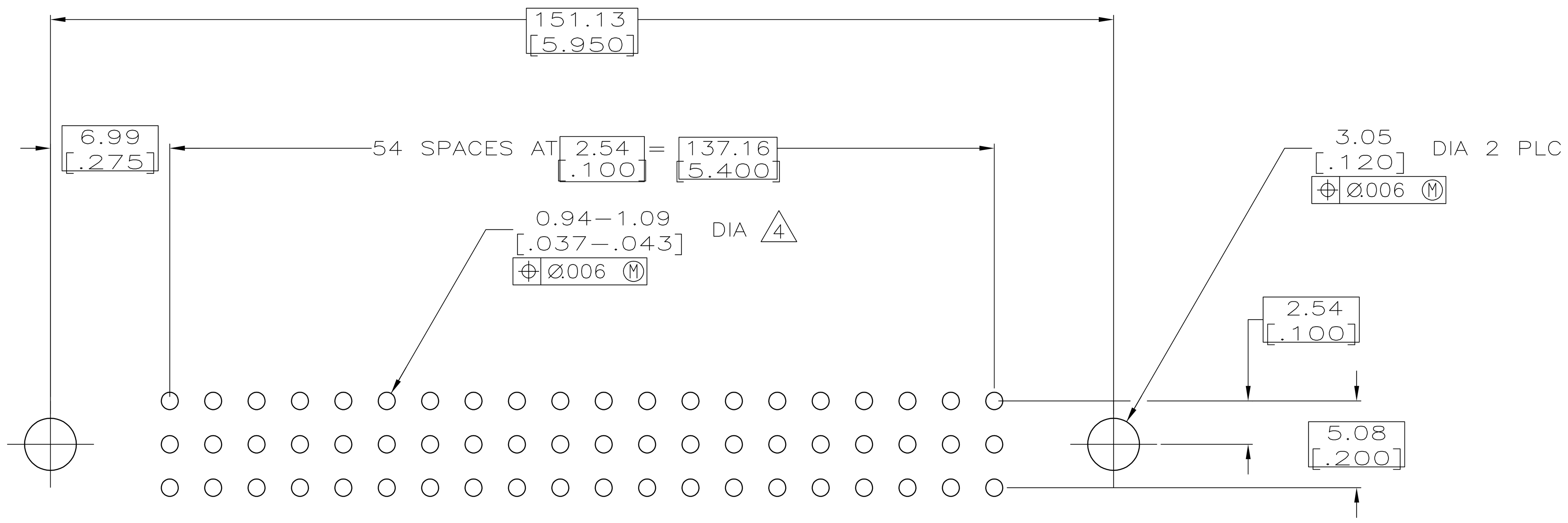

RECOMMENDED P.C. BOARD LAYOUT

NUMBER END	A	1		1		1		1		1		1		1		1		1		1		1	1	1	1	1	1	1	1	1	1	1	1	1	1	1	1	1	1	1	1	1	1	1	1	1	1	1	1	1	1	1	1	1	1	1	A	LETTER END
	B		1		1		1		1		1		1		1		1		1		1																													1	1	1	1	1	1	1	B	
	C	1		1		1		1		1		1		1		1		1		1		1	1	1	1	1	1	1	1	1	1	1	1	1	1	1	1	1	1	1	1	1	1	1	1	1	1	1	1	1	1	1	1	1	1	1	C	
	ROW	55					50					45					40					35					30					25					20					15					10					5				1	ROW	

COLUMN NUMBER – CONTACT LOCATION TABLE

NO OF POSN	PART NUMBER
107	532835–1

THIS DRAWING IS A CONTROLLED DOCUMENT.

DIMENSIONS: INCHES

TOLERANCES UNLESS OTHERWISE SPECIFIED:
0 PLC ± –
1 PLC ± –
2 PLC ± 0.13 [.005]
3 PLC ± –
4 PLC ± –
ANGLES ± –

MATERIAL: 1 2
FINISH: 3

DWN P.YEAGER 2–18–83
CHK P.F.Y. 3–1–83
APVD F.JUNKINS 3–2–83
PRODUCT SPEC —
APPLICATION SPEC —
WEIGHT —

TE Connectivity

NAME: HDI, PIN ASSEMBLY, 3 ROW SELECT LOADED

SIZE A1 | CAGE CODE 00779 | DRAWING NO C–532835 | RESTRICTED TO —

CUSTOMER DRAWING | SCALE 4:1 | SHEET 1 OF 1 | REV C

4805 (1/15)