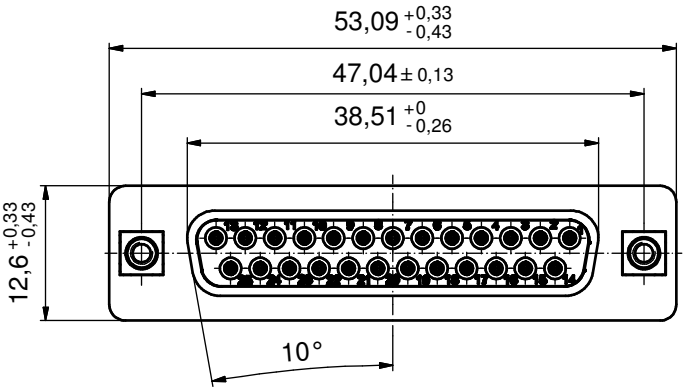

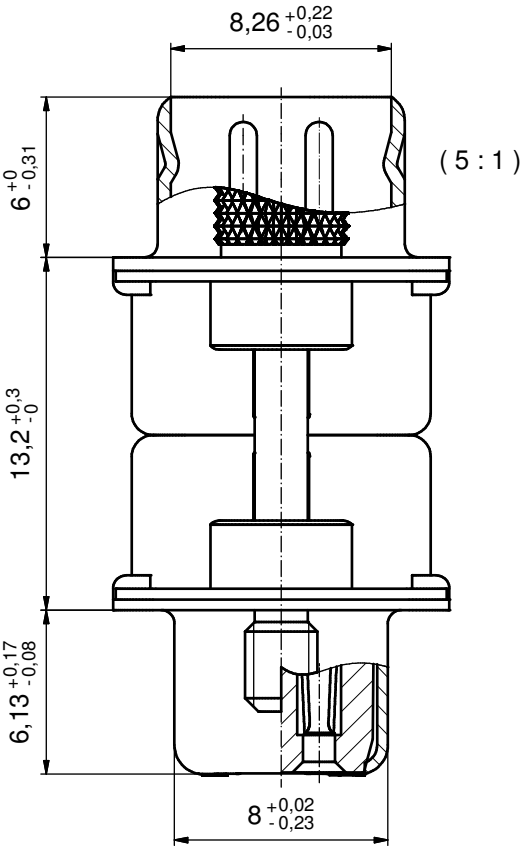

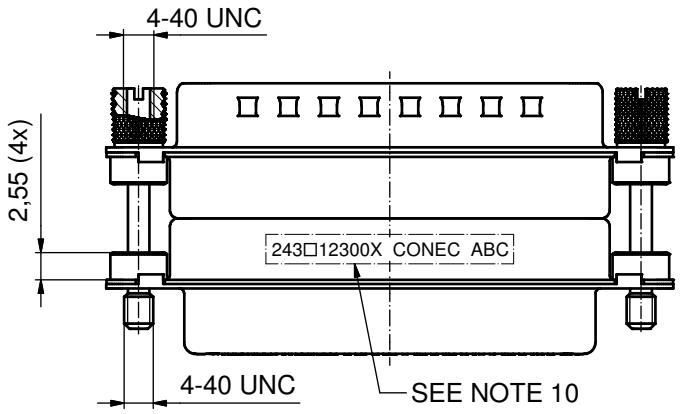

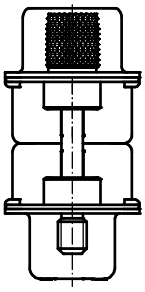

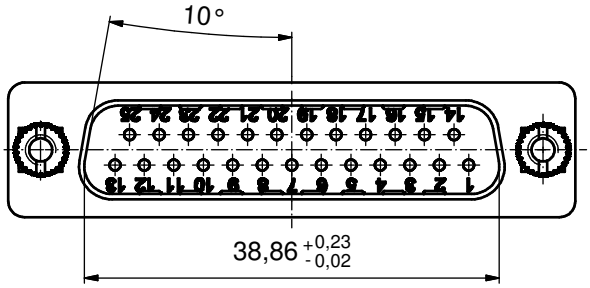

NOTES:

1. METALSHELLS: STEEL; min. 315µin TIN over 40-80µin NICKEL
2. INSULATORS: HIGH TEMPERATURE PLASTIC UL 94 V-0, BLACK
3. CONTACTS: COPPER ALLOY; PLATING (SEE PART NO.):
   - □ PLEASE ADD A for GOLD FLASH over NICKEL (PREFERRED TYPE)
   - □ PLEASE ADD B for 20µin HARD GOLD over min. 50µin NICKEL
   - □ PLEASE ADD C for 30µin HARD GOLD over min. 50µin NICKEL
4. THREADED INSERTS: COPPER ALLOY; min. 200µin TIN over 80µin NICKEL
5. COLLARS: COPPER ALLOY; min. 200µin TIN over 80µin NICKEL
6. JACK SCREWS: COPPER ALLOY; NICKEL PLATED
7. CAPACITANCE: 1300pF± 20%
8. DIELECTRIC WITHSTANDING VOLTAGE: 424 VDC
9. MAXIMUM TORQUE VALUE FOR THREAD: 6 in.LB
10. CONNECTOR IS PART MARKED: 243□12300X CONEC ABC (see note 3)

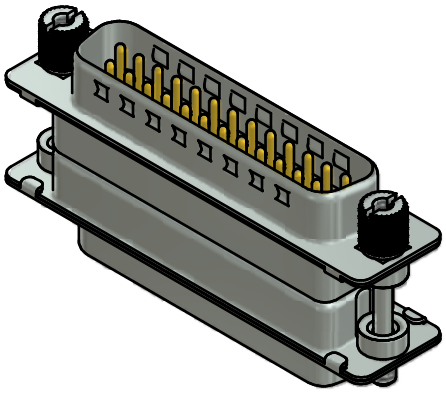

RoHS compliant

THIS DRAWING MAY NOT BE COPIED OR REPRODUCED IN ANY WAY, AND MAY NOT BE PASSED ON TO A THIRD PARTY WITHOUT WRITTEN PERMISSION. OWNERSHIP AND COPYRIGHT OF CONEC GmbH

DO NOT ALTER CAD DRAWING BY HAND

rev.	description	date	name
a	Original		

tolerance — dim. in mm

	date	name
drawn	28.09.15	Henneboel
appd.	28.09.15	Lehmenkühler
norm		
d-old		

CONEC®

scale: 2:1 (5:1)

material: SEE NOTES

title: D-SUB C FILTER ADAPTER
PLUG / SOCKET, 25pos.
with threaded insert and jack screw

dwg no: 24K1A1637 — DIN-A3 — sh: 1

part no: 243□12300X (see note 3)