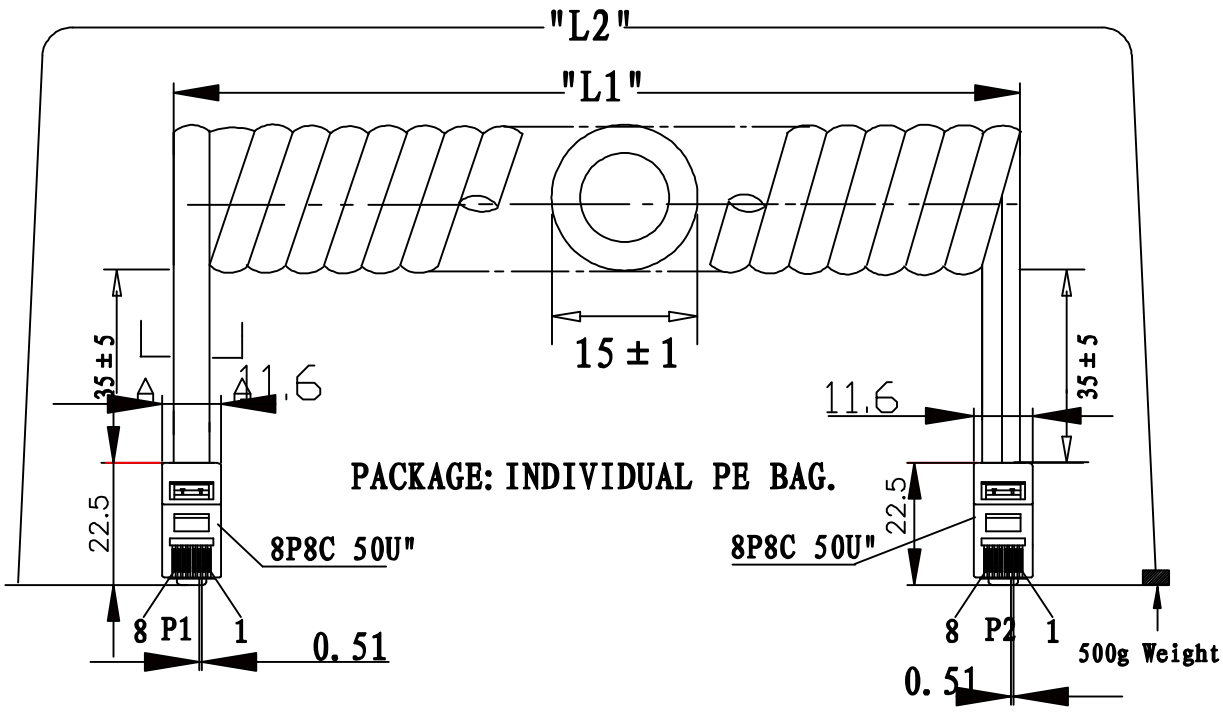

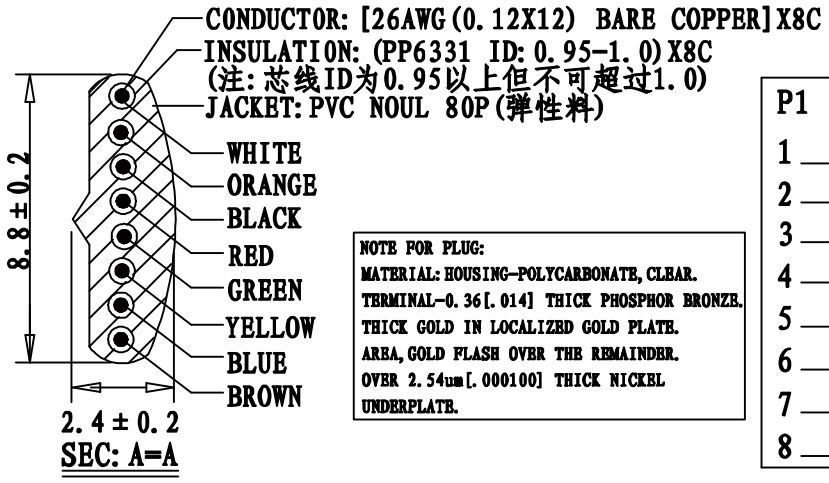

NOTE FOR PLUG:
MATERIAL: HOUSING-POLYCARBONATE, CLEAR.
TERMINAL-0.36[.014] THICK PHOSPHOR BRONZE.
THICK GOLD IN LOCALIZED GOLD PLATE.
AREA, GOLD FLASH OVER THE REMAINDER.
OVER 2.54um[.000100] THICK NICKEL
UNDERPLATE.

P1		P2
1	WHITE	1
2	ORANGE	2
3	BLACK	3
4	RED	4
5	GREEN	5
6	YELLOW	6
7	BLUE	7
8	BROWN	8

PART NO	DRAWING NO	BUYER COLOR	VENDOR COLOR	RETRACTED LENGTH ("L3")	CUSTOMER Accetped ("L2")	CUT LENGTH "L1"
522-26-8800-SV-0005F	A	Silver	S49-1 LIGHT	700 ± 50	5.0FT-5.75FT	2900-3000
522-26-8800-SV-0007F	B	Silver	S49-1 LIGHT	1000 ± 50	7.0FT-8.05FT	4000-4200
522-26-8800-SV-0010F	C	Silver	S49-1 LIGHT	1500 ± 50	10.0FT-11.5FT	5900-6100
522-26-8800-SV-0012F	D	Silver	S49-1 LIGHT	1650 ± 50	12.0FT-13.8FT	7000-7200
522-26-8800-SV-0014F	E	Silver	S49-1 LIGHT	1900 ± 50	14.0FT-16.1FT	7600-7800
522-26-8800-SV-0025F	F	Silver	S49-1 LIGHT	3200 ± 50	25.0FT-28.75FT	14300-14500

REVISE	VERSION	BASIS	CONTENTS
12-02-20	A/0	T0210A	NEW DRAWING

CnC Tech, LLC
Industrial Cable and Connector Technology

IDRAWING NO: 671-334		CUSTOMER: L-671
ITEM NO: 8C COILD CORD P+P PLUG		UNIT: mm
DATE: 2012-02-20		ISSUE (A/0)
DRAWN:	QE:	QA:
SALES DEPT:	SALES MANAGER:	