G11L0C-P04NJH0-0000

series_l, type_g1

General information

Part number	G11L0C-P04NJH0-0000
Termination	crimp
Size	1
Locking principle	break , push
Coding	0_key

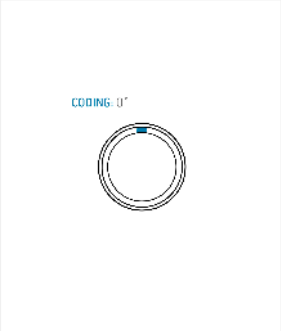

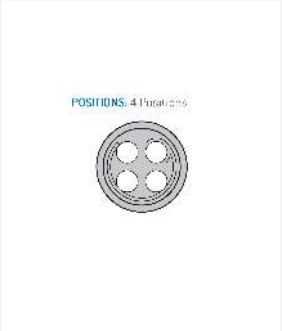

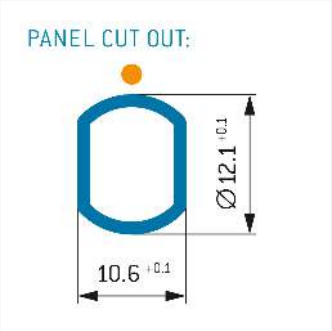

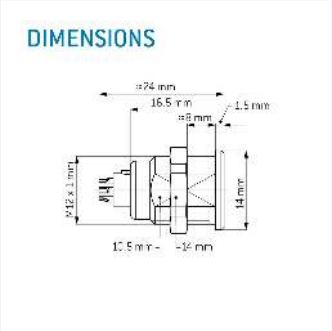

Contact insert description

Number of contacts	4
Contact type	sockets
Contact diameter	09mm
Insulator material	peek
Wire cross section	20-24_awg
Termination	crimp
Data transmission	ethernet_100

reverse_gender_on_request

Technical information

Max. creepage and air clearance distance	07_mm	11_mm
Nominal current single contact	10_a	iec_60512_5_2
Nominal current insert	10 A	vde_0298_4
Test voltage	1_kv_ac	sae_13441

safety_text

Mechanical and environmental data

Degree of protection*	ip50
Operating temperature	40_120_c
Mating cycles	5000

mated_unmated

Material and surface treatments

Housing	m_chrome
Contact	cu_alloy_gold

data_text

safety_text_2
data_text
ul_text
illustrative_text