TYCO DRAWING IS UNPUBLISHED. RELEASED FOR PUBLICATION
© COPYRIGHT - BY TYCO ELECTRONICS CORPORATION. ALL RIGHTS RESERVED.

JOB	DIST	REVISIONS				
AA	22	ZONE	LTR	DESCRIPTION	DATE	DWN	APVD
			B	REV PER ECO-08-017728	06JUL2008	QL	TX

MECHANICAL:

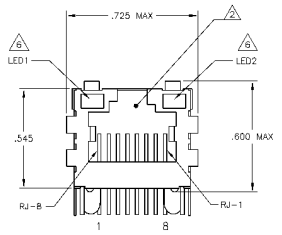

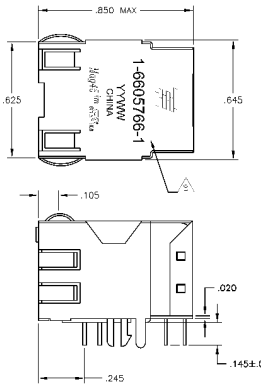

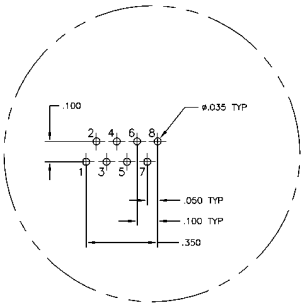

Pin Designations

726P7 SERIES MAGNETIC CIRCUIT

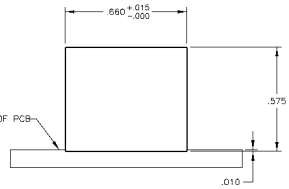

Suggested Panel Cutout

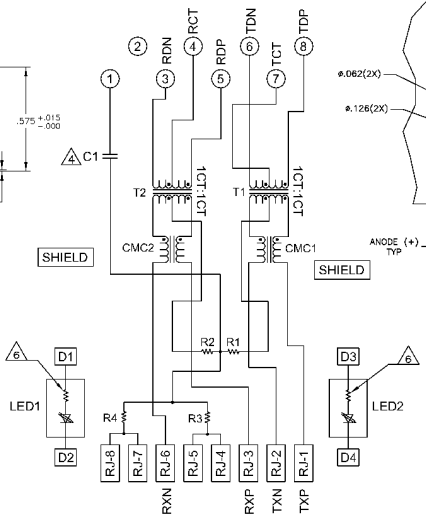

C1 = 1000 pF, 2kV DECOUPLING CAPACITOR
R1-R4 = 75 OHMS, 1/16W, 5% RESISTORS

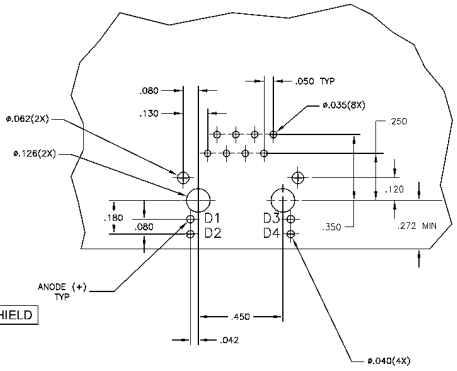

Suggested PCB Layout
(COMPONENT SIDE)

LED RESISTOR	DECOUPLING CAPACITOR	LED1	LED2	PART NUMBER
NO	YES	YELLOW	GREEN	5-6605766-9
YES	YES	GREEN	GREEN	5-6605766-1
YES	NO	GREEN	GREEN	1-6605766-1

THIS DRAWING IS A CONTROLLED DOCUMENT

DRAWN BY: VANELA - DCCKS
CHECKED BY: FARDLE
APPROVED BY: FARDLE

Tyco Electronics — Tyco Electronics Corporation, Changqing, China

1X1 MAG45(TM), 7X2P7 SCHEMATIC, 726 SERIES CIRCUIT, WITH OPTIONAL DECOUPLING CAPACITOR, WITH LEDS

108-2100

SIZE A1 | CAGE CODE 00779 | DRAWING NO C-6605766 | REV B

WEIGHT —

CUSTOMER DRAWING | SCALE NTS | SHEET 1 OF 1