| PART NUMBER | REV | FIRST USED | TERMINATOR | FEED TYPE | DESCRIPTION |
|---|---|---|---|---|---|
| 1426314-1 | D | – | LEADMAKER | MECH POST FEED | CUTS CARRIER |
| 1426314-2 | D | – | BENCH | MECH PRE FEED | CUTS CARRIER |
| 1426314-6 | D | – | LEADMAKER | MECH POST FEED | CONTINUOUS CARRIER |
| 7-1426314-1 | D | – | LEADMAKER | MECH POST FEED | -1 AND SPARE PARTS |
| 7-1426314-2 | D | – | BENCH | MECH PRE FEED | -2 AND SPARE PARTS |
| 7-1426314-6 | D | – | LEADMAKER | MECH POST FEED | -6 AND SPARE PARTS |
| 7-1426314-7 | A | – | – | – | SPARE PARTS KIT |

## CRIMP DATA AMP TERMINAL AMP CRIMP SPECS

TERMINAL NAME: 1.6 SYSTEM TERMINAL MALE / FEMALE △4

| CRIMP | SIZE | TYPE | RANGE |
|---|---|---|---|
| WIRE | 2.54 [.100 IN] | F | 1.50-2.00mm² |
| INSUL | 3.81 [.150 IN] | 0 | 2.20-2.80 [.087-.110 IN] |

WIRE STRIP LENGTH 4.00-4.80 [.157-.189 IN]

APPL INSTRUCTION 408-8322

| | | | |
|---|---|---|---|
| TERMINAL | 114-20121 | - | FEED |
| APPL SPEC | - | - | 12.50 [.492 IN] |

### TERMINALS APPLIED

| TERMINAL | SEAL △6 | – | – | – |
|---|---|---|---|---|
| 1-1437709-3 | 1-1437713-3 | – | – | – |
| 1-1437709-6 | 1-1437713-3 | – | – | – |
| 1-1437709-7 | 1-1437713-3 | – | – | – |
| 1437709-1 | 1-1437713-3 | – | – | – |
| – | – | – | – | – |
| – | – | – | – | – |
| – | – | – | – | – |

| WIRE SIZE mm² AWG | CRIMP HEIGHT | PIN PN AND LENGTH [IN] |
|---|---|---|
| 2.00mm² | 1.65 ±0.05 [.065 ±.002 IN] | 4-354778-4 [.2715] |
| 1.50mm² | 1.50 ±0.05 [.059 ±.002 IN] | 5-354778-6 [.2775] |
| – | – | – |
| – | – | – |
| – | – | – |
| – | – | – |
| – | – | – |
| – | – | – |
| – | – | – |
| – | – | – |
| – | – | – |
| – | – | – |
| – | – | – |
| – | – | – |
| – | – | – |

△1 RECOMMENDED SPARE PARTS.
2. GREASE RAM, CAM, CAM FOLLOWER AND FEED ROD LIGHTLY.
3. LUBRICATE DAILY PER THE APPLICATOR INSTRUCTION SHEET SUPPLIED WITH THE APPLICATOR.
△4 THIS APPLICATOR APPLIES TERMINAL WITH A SEAL. INSULATION RANGE SHOWN IS FOR TERMINALS; INSULATION RANGE FOR SEAL PN 1-1437713-3 IS 2.20-2.40mm.
△5 APPLY TORQ-SEAL IN ALLEN SOCKET TO FILL HOLE AFTER FLAT HD HAS BEEN ADJUSTED TO CORRECT HEIGHT AT QUALIFICATION. APPLY #1-23419-5 LOC-TITE TO THREADS.
△6 SEAL PART NUMBER ONLY FOR 1.50mm² & 2.00mm².

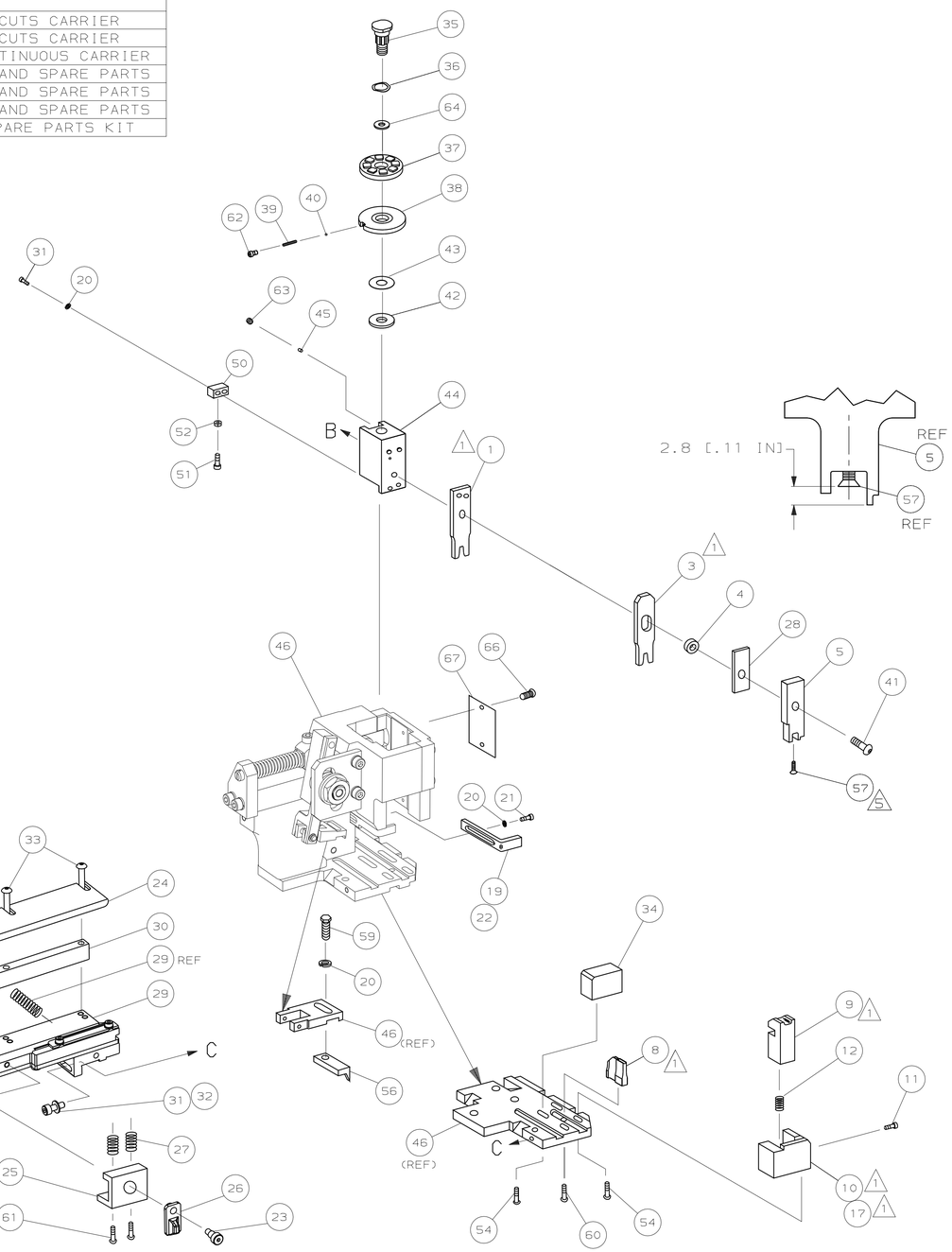


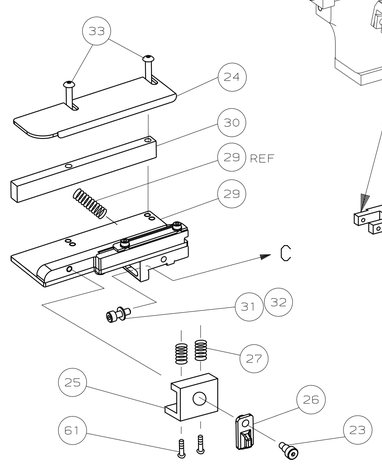


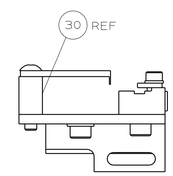


ITEM 30 LONG POSITION

| | | | | | | | | | |
|---|---|---|---|---|---|---|---|---|---|
| | | | | | | | | | 73 |
| – | 1 | 1 | 1 | 1 | 1 | 1 | 1426314 | PRINT, APPLICATOR LOG SHEET | 72 |
| – | 1 | 1 | 1 | 1 | 1 | 1 | 1338705-1 | DOCUMENTATION PACKAGE | 71 |
| | | | | | | | | | 70 |
| | | | | | | | | | 69 |
| | | | | | | | | | 68 |
| – | 1 | 1 | 1 | 1 | 1 | 1 | 461264-1 | PLATE, IDENTIFICATION | 67 |
| – | 2 | 2 | 2 | 2 | 2 | 2 | 21017-2 | SCR,DRIVE(#2x.19)ID PLATE | 66 |
| | | | | | | | | | 65 |
| – | 1 | 1 | 1 | 1 | 1 | 1 | 986950-1 | WASHER, FLAT PRECISION | 64 |
| – | 1 | 1 | 1 | 1 | 1 | 1 | 3-18031-0 | SCR,SKT SET(M6X6)RAM | 63 |
| – | 1 | 1 | 1 | 1 | 1 | 1 | 18023-9 | SCR,SHC(M4X6)INS DISC | 62 |
| – | 2 | 2 | 2 | 2 | 2 | 2 | 2-18032-5 | SCR,SKT SET(M5X20)DRAG | 61 |
| – | 1 | 1 | 1 | 1 | 1 | 1 | 18024-7 | SCR,BHC(M4X10)ANVIL | 60 |
| – | 1 | 1 | 1 | 1 | 1 | 1 | 5-18022-2 | SCR,HEX(M4X8)FEED FINGER | 59 |
| | | | | | | | | | 58 |
| – | 1 | 1 | 1 | 1 | 1 | 1 | 985575-3 | SCR,FHC(M3X10)DEP | 57 |
| – | 1 | 1 | 1 | 1 | 1 | 1 | 1338685-1 | PAWL, FEED | 56 |
| | | | | | | | | | 55 |
| – | 4 | 4 | 4 | 4 | 4 | 4 | 18024-8 | SCR,BHC(M4x12)SHEAR HOLDER | 54 |
| | | | | | | | | | 53 |
| – | 1 | 1 | 1 | 1 | 1 | 1 | 18030-1 | NUT,HEX(M3)HOLD DOWN | 52 |
| – | 1 | 1 | 1 | 1 | 1 | 1 | 811242-5 | BUMPER, HOLDDOWN | 51 |
| – | 1 | 1 | 1 | 1 | 1 | 1 | 690753-2 | SPACER, TONKER | 50 |
| – | 1 | 1 | 1 | 1 | 1 | 1 | 18024-3 | SCR,BHC(M3X10)CAM | 49 |
| – | – | 1 | – | – | 1 | – | 1338675-1 | CAM, PRE FEED 30 & 40 mm ST | 48 |
| – | 1 | – | 1 | 1 | – | 1 | 1338676-1 | CAM, POST FEED 30 & 40 mm ST | 47 |
| – | 1 | 1 | 1 | 1 | 1 | 1 | 1320999-3 | APPLICATOR BASIC SUBASSY | 46 |
| – | 1 | 1 | 1 | 1 | 1 | 1 | 690191-1 | PLUG, NYLON | 45 |
| – | 1 | 1 | 1 | 1 | 1 | 1 | 1338660-1 | RAM | 44 |
| – | 1 | 1 | 1 | 1 | 1 | 1 | 690125-1 | WASHER, LAMINATED | 43 |
| – | 1 | 1 | 1 | 1 | 1 | 1 | 690124-4 | WASHER, RAM | 42 |
| – | 1 | 1 | 1 | 1 | 1 | 1 | 2-18024-6 | SCR,BHC(M8X25)RAM | 41 |
| – | 1 | 1 | 1 | 1 | 1 | 1 | 23241-1 | BALL, STEEL | 40 |
| – | 1 | 1 | 1 | 1 | 1 | 1 | 2-22278-7 | SPRING, COMPRESSION | 39 |
| – | 1 | 1 | 1 | 1 | 1 | 1 | 1320922-1 | DISC, INSULATION | 38 |
| – | 1 | 1 | 1 | 1 | 1 | 1 | 354777-1 | WIRE DISC, PLASTIC | 37 |
| – | 1 | 1 | 1 | 1 | 1 | 1 | 22480-5 | WASHER, SPRING | 36 |
| – | 1 | 1 | 1 | 1 | 1 | 1 | 690212-1 | POST, RAM | 35 |
| – | 1 | 1 | 1 | 1 | 1 | 1 | 1-1320934-3 | SUPPORT, TERMINAL | 34 |
| – | 2 | 2 | 2 | 2 | 2 | 2 | 1-18024-0 | SCR,BHC(M4X20)STRIP GUIDE | 33 |
| – | 1 | 1 | 1 | 1 | 1 | 1 | 18027-2 | WASHER, FLAT(M4) | 32 |
| – | 3 | 3 | 3 | 3 | 3 | 3 | 1-18023-2 | SCR,SKT CAP(M4X12)MOUNT BLOCK | 31 |
| – | 1 | 1 | 1 | 1 | 1 | 1 | 1320908-1 | SPACER, STRIP GUIDE | 30 |
| – | 1 | 1 | 1 | 1 | 1 | 1 | 1633073-2 | STRIP GUIDE PLATE ASSY | 29 |
| – | 1 | 1 | 1 | 1 | 1 | 1 | 1-455888-4 | SPACER, FRONT SHEAR DEP | 28 |
| – | 2 | 2 | 2 | 2 | 2 | 2 | 1-22284-0 | SPRING, DRAG | 27 |
| – | 1 | 1 | 1 | 1 | 1 | 1 | 356835-1 | LEVER, DRAG RELEASE | 26 |
| – | 1 | 1 | 1 | 1 | 1 | 1 | 240792-1 | DRAG, TERMINAL | 25 |
| – | 1 | 1 | 1 | 1 | 1 | 1 | 1320928-1 | PLATE, STRIP GUIDE | 24 |
| – | 1 | 1 | 1 | 1 | 1 | 1 | 980371-4 | SCR,SHC SHLD | 23 |
| – | 1 | – | 1 | 1 | – | 1 | 690472-2 | STRIPPER | 22 |
| – | 1 | 1 | 1 | 1 | 1 | 1 | 1-18023-1 | SCR,SHC(M4X10)STRIPPER | 21 |
| – | 4 | 4 | 4 | 4 | 4 | 4 | 18025-2 | WASHER,LOCK(M4)STRIPPER | 20 |
| – | – | 1 | – | – | 1 | – | 690472-1 | STRIPPER | 19 |
| | | | | | | | | | 18 |
| △1 – | 1 | – | – | 1 | – | – | 1338684-2 | HOLDER, SHEAR, FRONT (NO-CUT) | 17 |
| | | | | | | | | | 16 |
| | | | | | | | | | 15 |
| | | | | | | | | | 14 |
| | | | | | | | | | 13 |
| – | 1 | 1 | 1 | 1 | 1 | 1 | 3-22280-3 | SPRING, SHEAR | 12 |
| – | 1 | 1 | 1 | 1 | 1 | 1 | 356885-5 | STOP, SHEAR | 11 |
| △1 – | – | 1 | 1 | – | 1 | 1 | 1-1320921-0 | HOLDER, SHEAR, FRONT (CUT) | 10 |
| △1 – | 1 | 1 | 1 | 1 | 1 | 1 | 318707-1 | SHEAR, FLOAT (FRONT) | 9 |
| △1 1 | 2 | 2 | 2 | 1 | 1 | 1 | 1-1333206-9 | ANVIL | 8 |
| | | | | | | | | | 7 |
| | | | | | | | | | 6 |
| – | 1 | 1 | 1 | 1 | 1 | 1 | 1338680-1 | DEPRESSOR, SHEAR (FRONT) | 5 |
| – | 1 | 1 | 1 | 1 | 1 | 1 | 238011-2 | SPACER, BLOCK CRIMPER | 4 |
| △1 1 | 2 | 2 | 2 | 1 | 1 | 1 | 1-904741-3 | CRIMPER, INSULATION | 3 |
| | | | | | | | | | 2 |
| △1 1 | 2 | 2 | 2 | 1 | 1 | 1 | 456407-9 | CRIMPER, WIRE | 1 |
| -77 | -76 | -72 | -71 | -6 | -2 | -1 | PART NO | DESCRIPTION | ITEM NO |

← REVISION OF EACH ASSY NO (WHEN BLANK, USE DWG REVISION)

QTY REQD PER ASSY — PARTS LIST

VIEW B ROTATED 180°

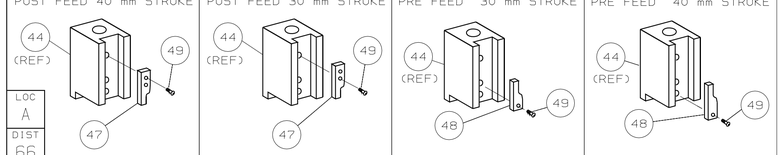


| P | F | LTR | REVISION RECORD | APP | DATE |
|---|---|---|---|---|---|
| | | D | SEE ECR-06-008394 | LJL | APR06 |
| | | C | SEE ECR-05-007489 | LJL | AUG05 |
| | | B | 0150-0808-03 | BH | JUL03 |
| | | A1 | SEE ECN 015A-0547-02 | LJL | AUG02 |
| | | A | SEE ECN 015A-0470-02 | MC | JUL02 |

DIMENSIONS: mm [INCHES]
DO NOT SCALE PRINT.
TOLERANCES UNLESS OTHERWISE SPECIFIED:
1 PLC DEC ±-
2 PLC DEC ±-
3 PLC DEC ±-
ANGLES ± -
SURF TEXTURE: √
REMOVE BURRS, BREAK SHARP EDGES RO.38 MAX

MATL – – | HT TR – – | FIN – –

DR 19APR02 M.CLIFFORD | APP 19APR02 F.BACKHURST
CHK – – | REL 04-07-02 M.CLIFFORD

AMP Incorporated Harrisburg, PA 17105-3608

NAME SIDE FEED HD-I APPLICATOR | MACHINE REF HD-I APPL

SCALE – | D | DWG NO 1426314 | SHEET 1 OF 1 | REV D

CAGE CODE 00779 | CUSTOMER AND ASSEMBLY DRAWING | RESTRICTED TO –

LAYOUT L1426314 | SET UP GAGE 458637-3

THIS DRAWING IS A CONTROLLED DOCUMENT.

THIS DRAWING IS UNPUBLISHED. © COPYRIGHT 2002 BY AMP INCORPORATED. ALL RIGHTS RESERVED. RELEASED FOR PUBLICATION 2002