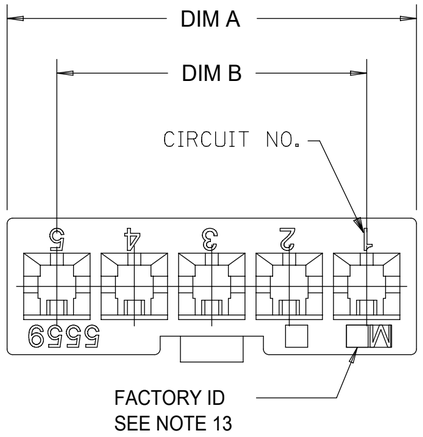

LEGEND

172646-** * *

SERIES NO

CIRCUIT SIZE (04-05)

MATERIAL OPTION: SEE NOTE 1

MOUNTING AND LOCK OPTION:
2=WITH EARS, SINGLE ROW
3=WITHOUT EARS, SINGLE ROW

MATERIAL NUMBER	MOUNTING OPTION	COLOR	CKT SIZE	DIM A	DIM B	DIM C	DIM D
172646-0212	W/EARS	BLACK	2	.378 (9.60)	.165 (4.20)	.394 (10.00)	.591 (15.00)
172646-0213	NO EARS						
172646-0412	W/EARS		4	.709 (18.00)	.496 (12.60)	.724 (18.40)	.921 (23.40)
172646-0413	NO EARS						
172646-0512	W/EARS		5	.874 (22.20)	.661 (16.80)	.890 (22.60)	1.087 (27.60)
172646-0513	NO EARS						
172646-0612	W/EARS		6	1.039 (26.40)	.827 (21.00)	1.055 (26.80)	1.252 (31.80)
172646-0613	NO EARS						
172646-0202	W/EARS	NATURAL (BEIGE)	2	.378 (9.60)	.165 (4.20)	.394 (10.00)	.591 (15.00)
172646-0203	NO EARS						
172646-0402	W/EARS		4	.709 (18.00)	.496 (12.60)	.724 (18.40)	.921 (23.40)
172646-0403	NO EARS						
172646-0502	W/EARS		5	.874 (22.20)	.661 (16.80)	.890 (22.60)	1.087 (27.60)
172646-0503	NO EARS						
172646-0602	W/EARS		6	1.039 (26.40)	.827 (21.00)	1.055 (26.80)	1.252 (31.80)
172646-0603	NO EARS						

X = NOT TOOLED

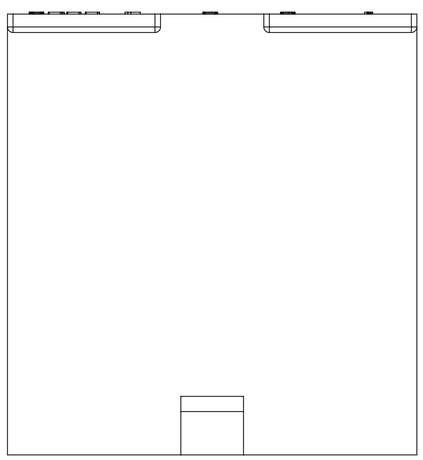

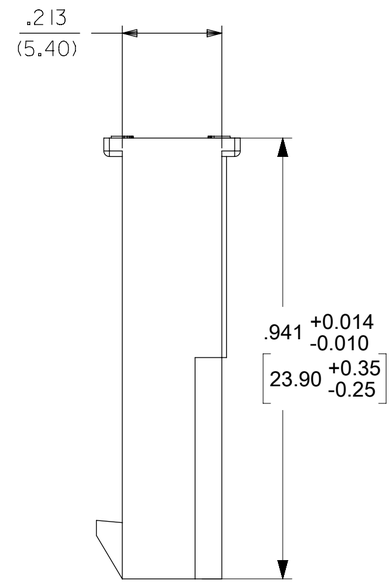

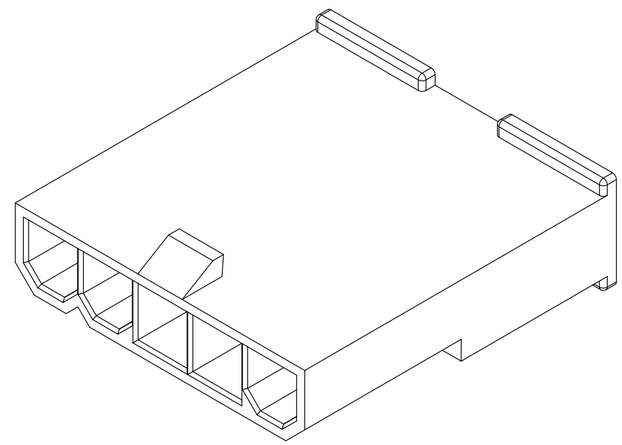

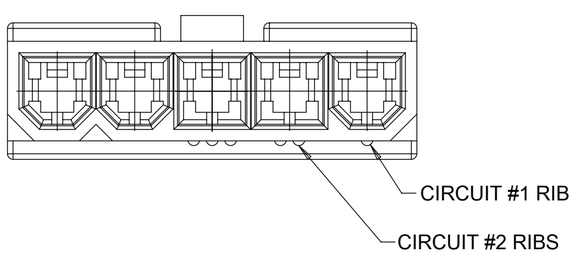

5 CKT WITHOUT
MOUNTING EARS SHOWN

NOTES:
1) MATERIAL:
"0" = NYLON, UL94V-2, COLOR: NATURAL (BEIGE); IEC 60335-1, 5th EDITION GLOW WIRE CAPABLE.
"1" = NYLON, UL94V-2, COLOR: BLACK; IEC 60335-1, 5th EDITION GLOW WIRE CAPABLE.
2) FINISH: NOT APPLICABLE
3) PRODUCT SPECIFICATION: PS-5556-001
4) PACKAGING: BULK PER PK-5559-003
5) PART MATES WITH MOLEX RECEPTACLE #46994.
6) PART TO BE USED WITH MOLEX MALE TERMINAL #5558.
7) PART IS NOT DESIGNED FOR CURRENT SHARING.
8) CONNECTORS ARE NOT TO BE MATED OR UNMATED WHILE CIRCUITS ARE LIVE.
9) WIRES ARE TO BE DRESSED IN SUCH A MANNER TO ALLOW THE TERMINALS TO FLOAT FREELY IN THE POCKET.
10) PANEL MOUNT VERSION IS FOR USE WITH .031-.079/(0.80/2.00) THICK PANELS.
11 PANEL SHOULD BE PUNCHED IN THE DIRECTION OF CONNECTOR INSERTION.
12) PART CONFORMS TO CLASS "B" REQUIREMENTS OF COSMETIC SPECIFICATION PS-45499-002 WITH THE EXCEPTION OF DISCOLORATION, FLASH AND SINK MEET CLASS "C" REQUIREMENTS.
13) FACTORY ID MAY BE LOCATED ON EARS.

QUALITY SYMBOLS
E/A = 0
E/C = 0
E/D = 0
▼ = 0
C = 0
☒ = 0
■ = 0
C = 0

THIS DRAWING CONTAINS INFORMATION THAT IS PROPRIETARY TO MOLEX ELECTRONIC TECHNOLOGIES, LLC AND SHOULD NOT BE USED WITHOUT WRITTEN PERMISSION

EC NO: 107626 — ADD TOL TO (E-7) DIM
DRWN: CSLAFTER — 2016/08/17
CHK'D: JBELL — 2016/09/29
APPR: FSMITH — 2016/10/03

GENERAL TOLERANCES (UNLESS SPECIFIED)

	MM	INCH
4 PLACES	±	±
3 PLACES	±	± 0.01
2 PLACES	± 0.25	± 0.015
1 PLACES	± 0.38	±
0 PLACES	±	±

ANGULAR TOL ± 0.5

DRAFT WHERE APPLICABLE MUST REMAIN WITHIN DIMENSIONS

A4 — REV

DIMENSION UNITS: IN/MM
SCALE: 4:1
DRWN BY: NNGUYEN — DATE: 2013/04/11
CHK'D BY: JBELL — DATE: 2013/04/11
APPR BY: FSMITH — DATE: 2014/05/16
DRAWING SIZE: C
THIRD ANGLE PROJECTION

molex®

MINI-FIT JR. SERIES PLUG
SINGLE ROW (GLOW WIRE)

PRODUCT CUSTOMER DRAWING

SERIES	MATERIAL NUMBER	CUSTOMER
172646	SEE SHEET 1	GENERAL MARKET

DOCUMENT NUMBER	DOC TYPE	DOC PART	SHEET NUMBER
SD-172646-0000	PSD	000	1 OF 2

RELEASE STATUS | RELEASE DATE

FORMAT: Eng-lega-master-tb-prod-C
REVISION: C
DATE: 2016/02/04

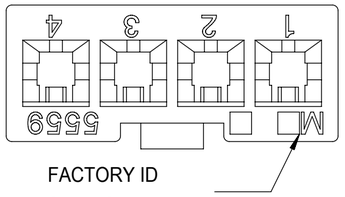

FACTORY ID
SEE NOTE 13

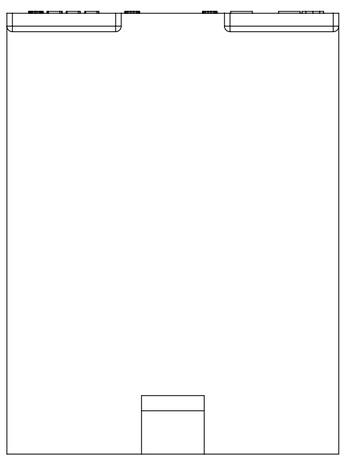

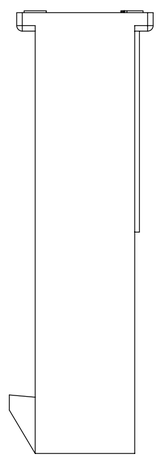

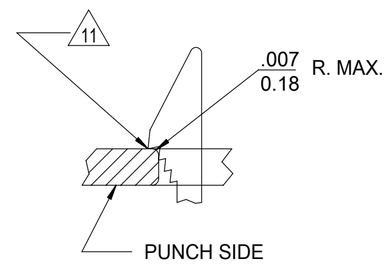

SECTION "Z"-"Z"
NO SCALE

SEE NOTE 13

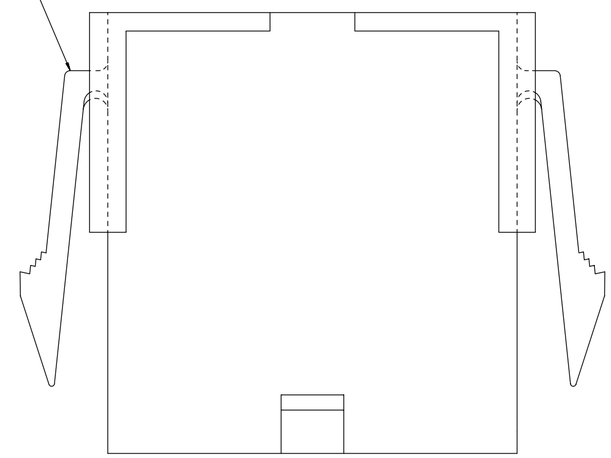

WITH MOUNTING EARS

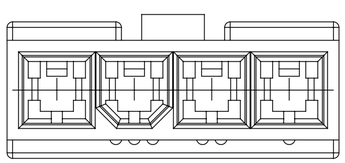

4 CKT WITHOUT
MOUNTING EARS SHOWN

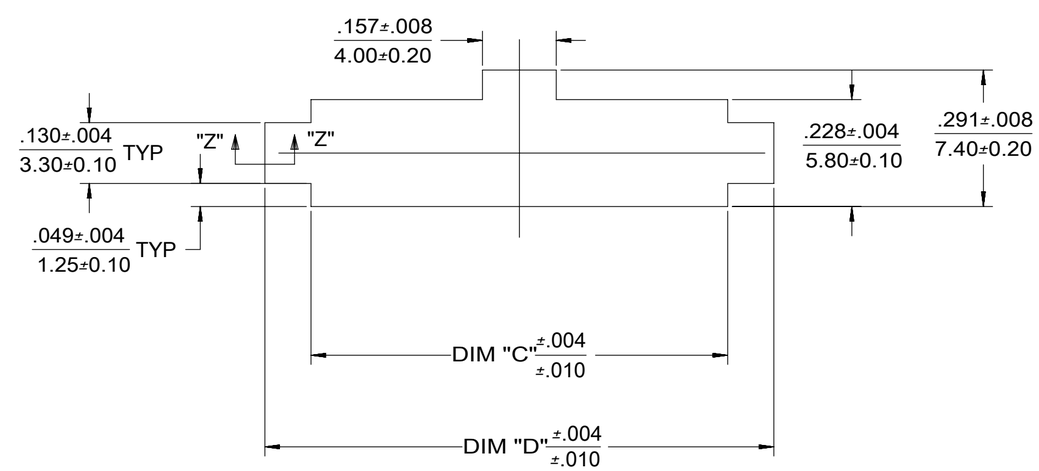

RECOMMENDED PANEL CUT-OUT
(SEE NOTE 10 & 11)

QUALITY SYMBOLS	
EA	= 0
EC	= 0
ED	= 0
▼	= 0
C	= 0
☒	= 0
■	= 0
G	= 0

THIS DRAWING CONTAINS INFORMATION THAT IS PROPRIETARY TO MOLEX ELECTRONIC TECHNOLOGIES, LLC AND SHOULD NOT BE USED WITHOUT WRITTEN PERMISSION

REV	EC NO:	DRWN:	CHK'D:	APPR:
A4	107626	CSLAFTER	JBELL	FSMITH
	ADD TOL TO (E-7) DIM	2016/08/17	2016/09/29	2016/10/03

GENERAL TOLERANCES (UNLESS SPECIFIED)

	MM	INCH
4 PLACES	±	±
3 PLACES	±	± 0.01
2 PLACES	± 0.25	± 0.015
1 PLACES	± 0.38	±
0 PLACES	±	±

ANGULAR TOL ± 0.5

DRAFT WHERE APPLICABLE MUST REMAIN WITHIN DIMENSIONS

DIMENSION UNITS	SCALE
IN/MM	1:1

		DATE
DRWN BY	NNGUYEN	2013/04/11
CHK'D BY	JBELL	2013/04/11
APPR BY	FSMITH	2014/05/16

DRAWING SIZE: C

THIRD ANGLE PROJECTION

molex®

MINI-FIT JR. SERIES PLUG
SINGLE ROW (GLOW WIRE)

PRODUCT CUSTOMER DRAWING

SERIES	MATERIAL NUMBER	CUSTOMER
172646	SEE SHEET 1	GENERAL MARKET

DOCUMENT NUMBER	DOC TYPE	DOC PART	SHEET NUMBER
SD-172646-0000	PSD	000	2 OF 2

RELEASE STATUS	P1	RELEASE DATE	03.10.2016 16:50:38

FORMAT: Eng-legs-master-tb-prod-C
REVISION: C
DATE: 2016/02/04