BUD	PART NAME	NEMA DIE CAST BOX WITH EMI/RFI SHIELDING	PART No.	ANS-3833 ANS-3833-B	REVISION DATE	8-22-13

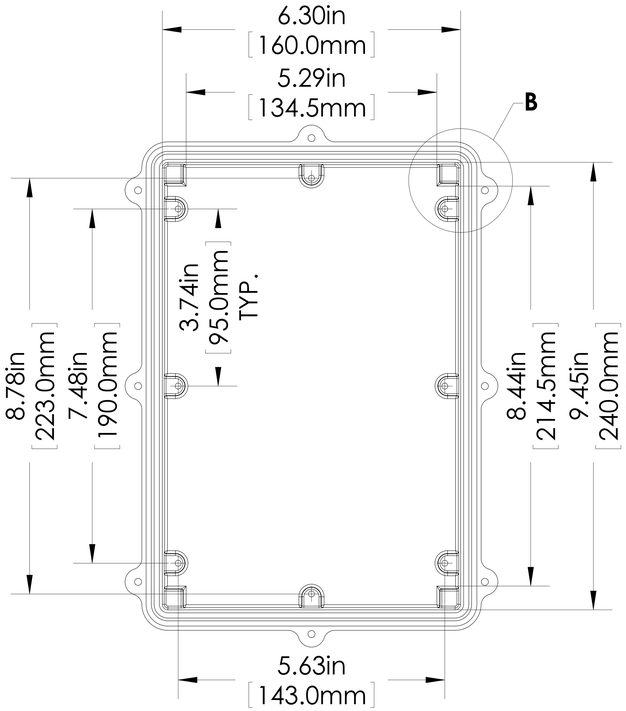

INSIDE BODY DETAILS

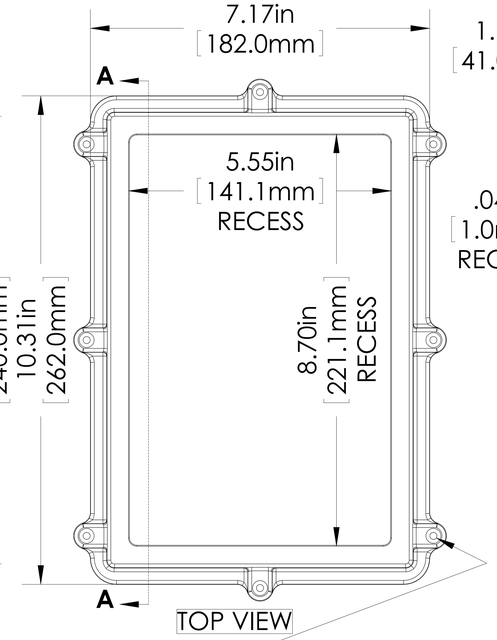

TOP VIEW

EIGHT (8) M4x0.7 PITCH
x 20mm (.787in.) LG.
STAINLESS STEEL FLAT HEAD
CAPTIVE SCREWS

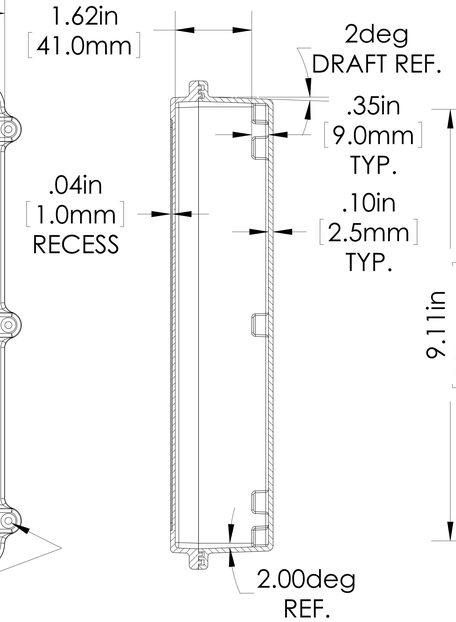

SECTION A-A

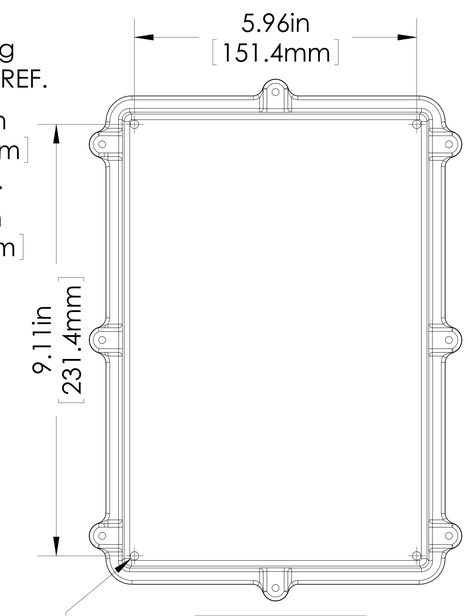

BOTTOM VIEW

∅.177in
[4.50mm]
x .315in[8.00mm] DEEP (4X)
[ACCEPTS M5 x 10mm(.394in.) LG.
SELF-TAPPING SCREWS.
(NOT SUPPLIED)]

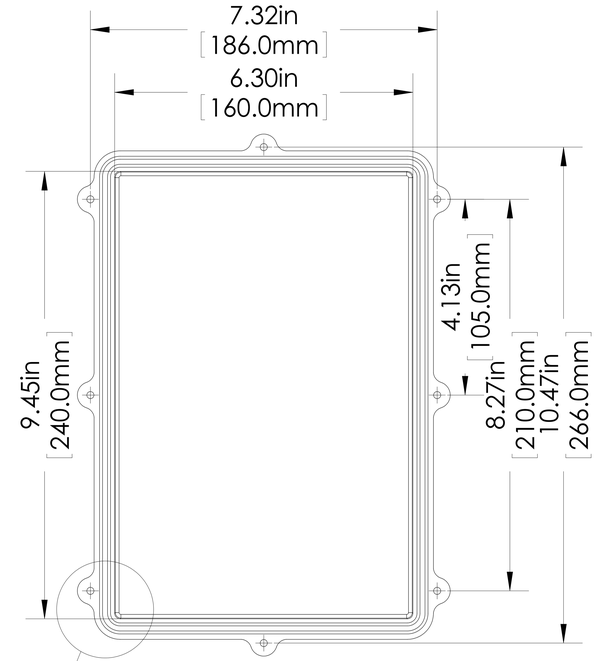

INSIDE COVER DETAILS

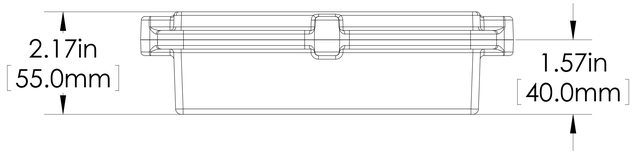

MEETS NEMA 1, 2, 4, 4X, 12, 13 AND IP67 RATINGS.

MATERIAL: ALUMINUM ALLOY ADC-12

FINISH: NATURAL (NO SUFFIX PART NO.)
SMOOTH BLACK (-B SUFFIX PART NO.)

TOLERANCES: ALL HOLE DIAMETERS: ±.005in[±.13mm]
ALL OTHER DIMENSIONS: ±.02in[±.4mm]

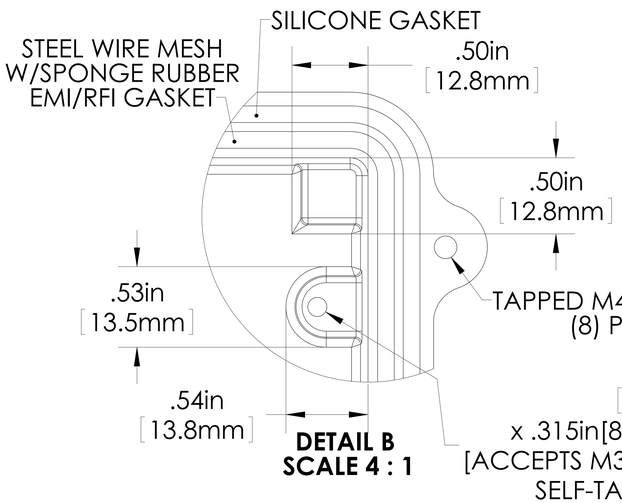

DETAIL B
SCALE 4 : 1

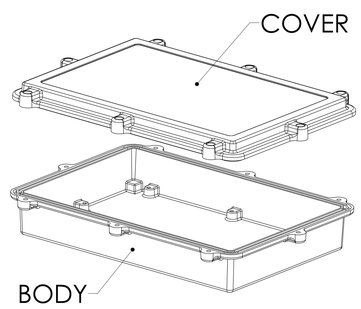

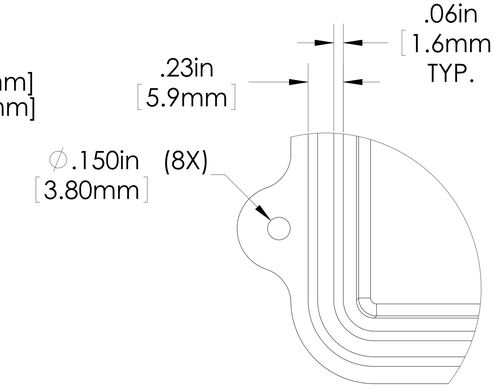

DETAIL C
SCALE 4 : 1

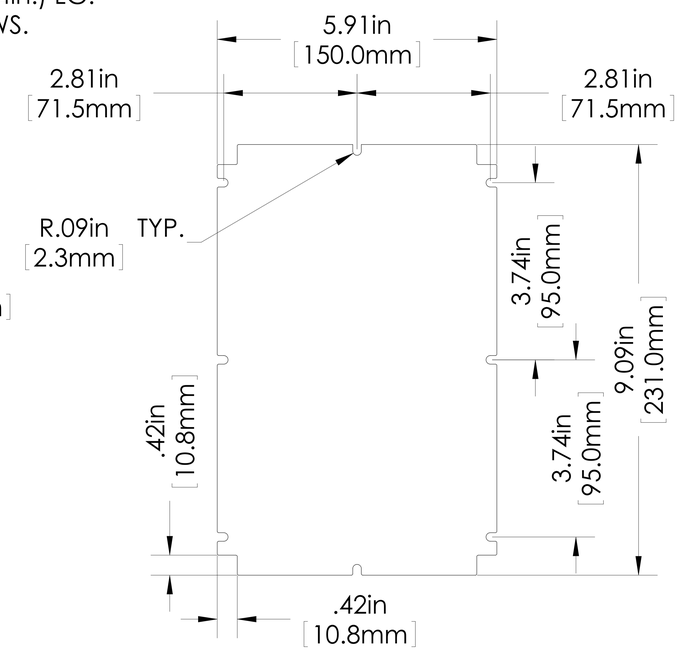

SUGGESTED PC BOARD OR
INTERNAL PANEL LAYOUT