Mar.1.2016 Copyright 2016 HIROSE ELECTRIC CO., LTD. All Rights Reserved.

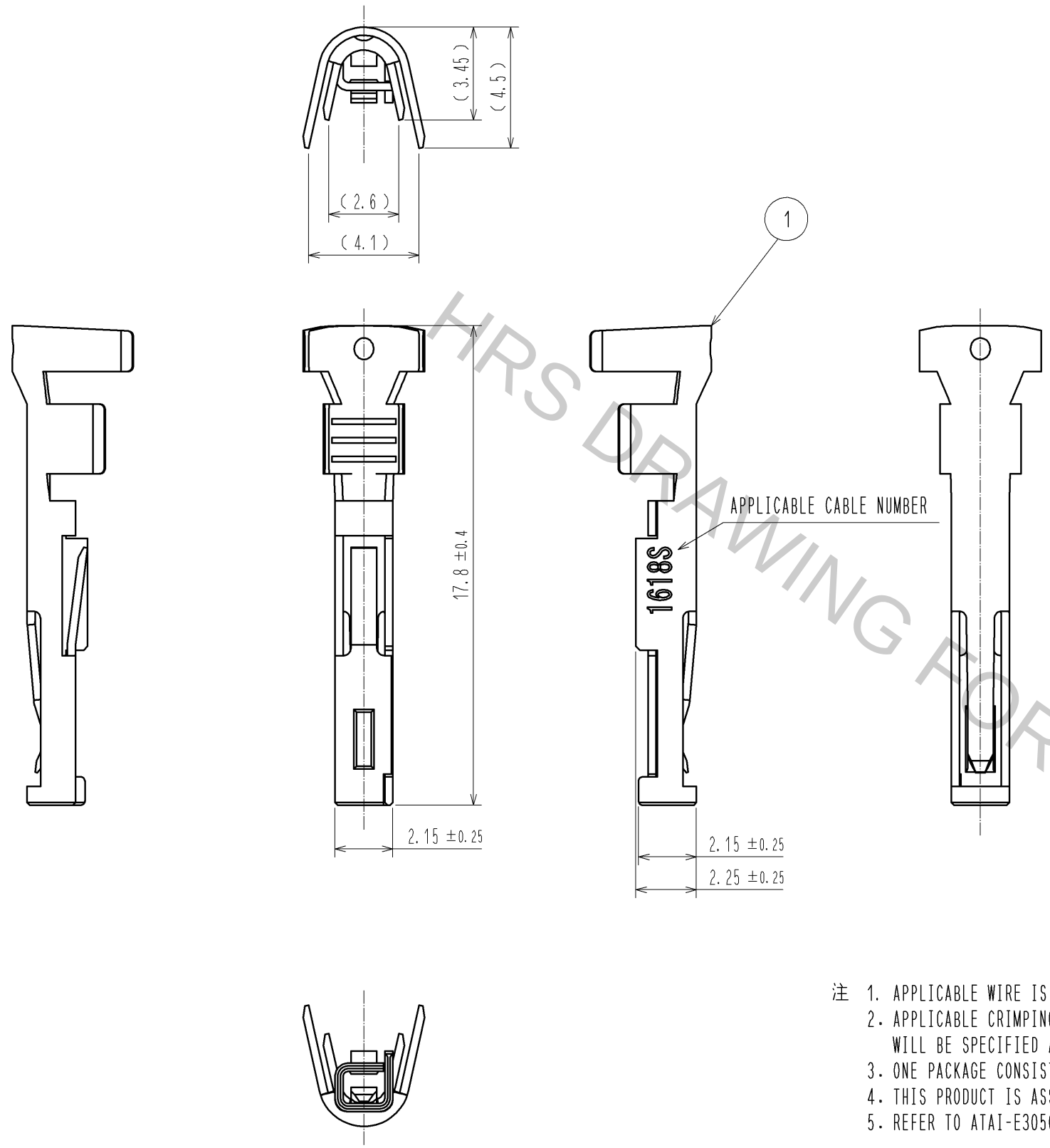

HRS DRAWING FOR REFERENCE;

注 1. APPLICABLE WIRE IS AWG #16(1.25sq) ~ #18(0.75sq) OF STRANDED CABLE.
2. APPLICABLE CRIMPING MACHINE AND CRIMPING CONDITIONS (CRIMP HEIGHT etc.) WILL BE SPECIFIED ACCORDING TO AWG # OR WIRE APPLIED.
3. ONE PACKAGE CONSISTS OF 100 PCS.
4. THIS PRODUCT IS ASSEMBLED WITH TJ50A-41S-※.
5. REFER TO ATAI-E3050 FOR CRIMP QUALITY STANDARDS.

NO.	MATERIAL	FINISH , REMARKS
1	COPPER ALLOY	CONTACT AREA : GOLD PLATING 0.76μm TERMINAL AREA : TIN PLATING UNDER PLATING : NICKEL PLATING

UNITS mm	SCALE 5 : 1	COUNT	DESCRIPTION OF REVISIONS	DESIGNED	CHECKED	DATE
		△				

HRS HIROSE ELECTRIC CO., LTD.

APPROVED	: NM. NISHIMATSU	14. 06. 03	DRAWING NO.	EDC3-128056-00
CHECKED	: NM. NISHIMATSU	14. 06. 03	PART NO.	TJ50A-1618SCA
DESIGNED	: KG. OKITA	14. 06. 03		
DRAWN	: KG. OKITA	14. 06. 03	CODE NO.	CL236-3103-6-00 △ 1/1

FORM HC0011-5-7