G80LAC-P02LJG0-0000

series_l, type_g8

General information

Part number	G80LAC-P02LJG0-0000
Termination	solder
Size	0
Locking principle	break , push
Coding	a_key

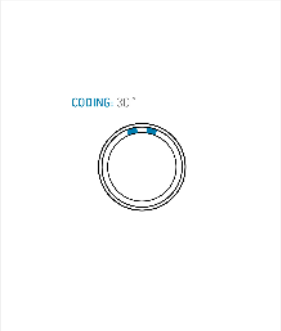

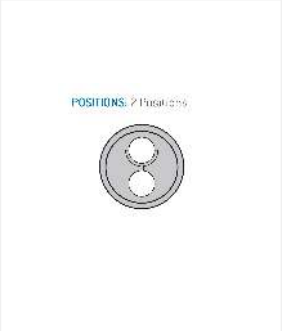

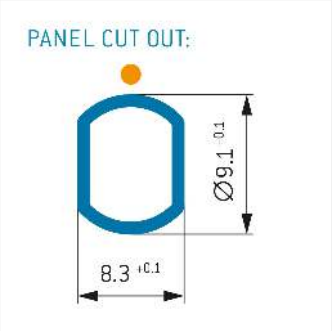

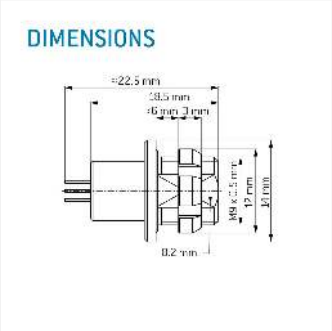

Contact insert description

Number of contacts	2
Contact type	sockets
Contact diameter	09mm
Insulator material	peek
Wire cross section	22_awg
Termination	solder
Termination diameter	085mm

reverse_gender_on_request

Technical information

Max. creepage and air clearance distance	10_mm	10_mm
Nominal current single contact	075_a	iec_60512_5_2
Nominal current insert	7,5 A	vde_0298_4
Test voltage	15_kv_ac	sae_13441

safety_text

Mechanical and environmental data

Degree of protection*	ip68
Operating temperature	40_120_c
Mating cycles	5000

unmated

Material and surface treatments

Housing	m_chrome
Contact	cu_alloy_gold

safety_text_2
ul_text
illustrative_text