	COUNT	DESCRIPTION OF REVISIONS	BY	CHKD	DATE		COUNT	DESCRIPTION OF REVISIONS	BY	CHKD	DATE
△					. .	△					. .
△					. .	△					. .
△					. .	△					. .

ELV.RoHS COMPLIANT

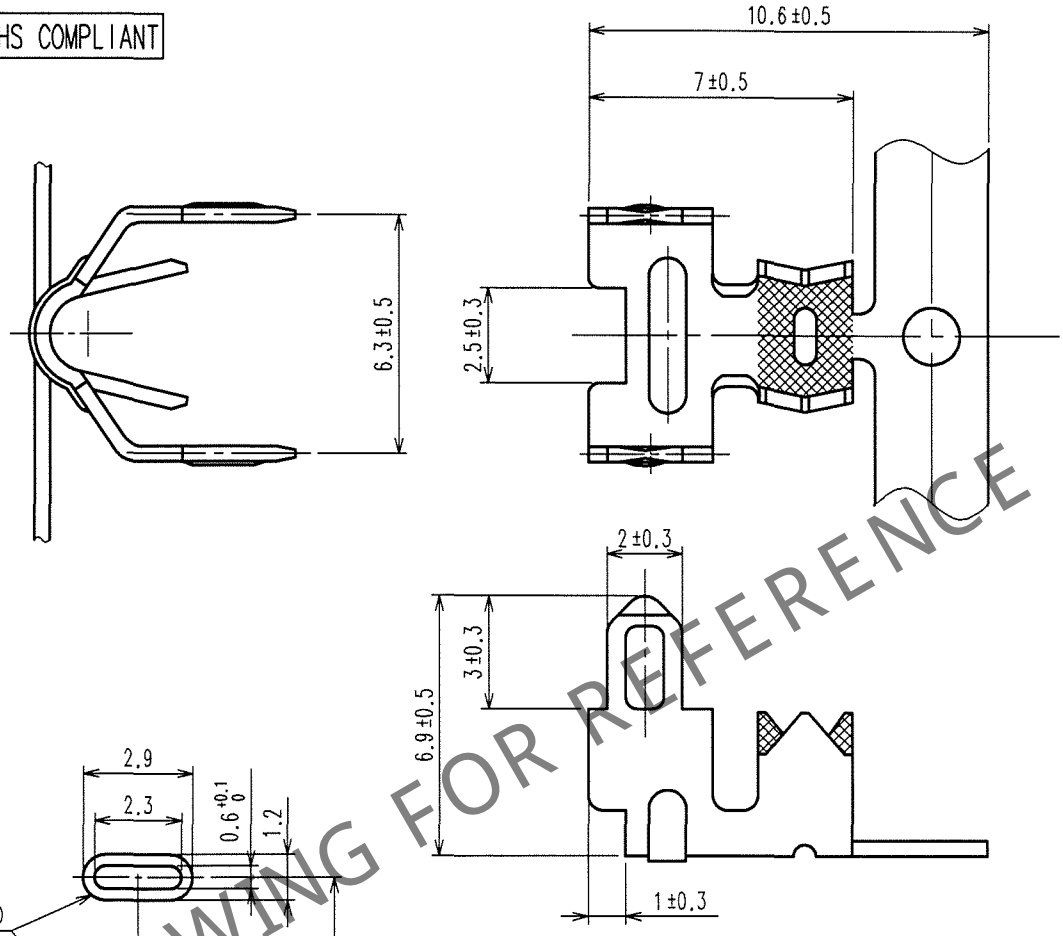

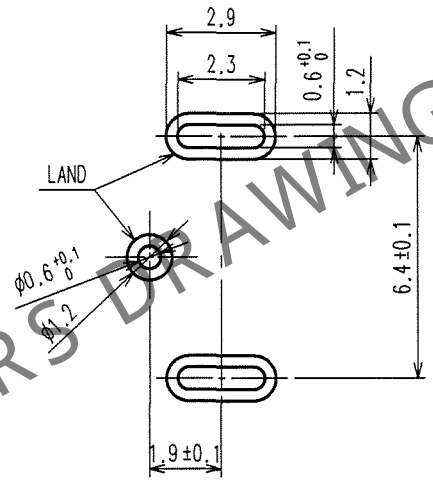

RECOMMENDED PC BOARD PATTERN

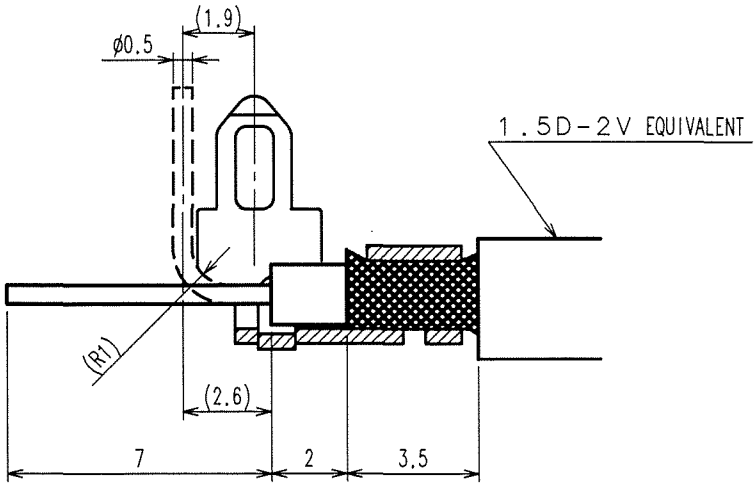

RECOMMENDED CABLE ASSEMBLY FIGURE

NO.	MATERIAL	FINISH, REMARKS	NO.	MATERIAL	FINISH, REMARKS
1	BRASS	TIN PLATED			

CODE NO.(OLD)	DRAWN	DESIGNED	CHECKED	APPROVED	RELEASED
CL559-0228-3	S.KURIYA '06. 8. 10	T.IKEDA '01. 11. 13	K. Sato '06. 8. 10	K. Sato '06. 8. 10	

SACLE 5 : 1	DRAWING NO. EDC4-165140-01	PART NO. G-1.6PCF(70)
UNITS mm	HRS HIROSE ELECTRIC CO.,LTD.	CODE NO. CL755-0029-8-70 1/1

FORM NO.228

TO

HRS DRAWING FOR REFERENCE

Jul.1.2023 Copyright 2023 HIROSE ELECTRIC CO., LTD. All Rights Reserved.
In case of consideration for using Automotive equipment / device which demand high reliability, kindly contact our sales window correspondents.