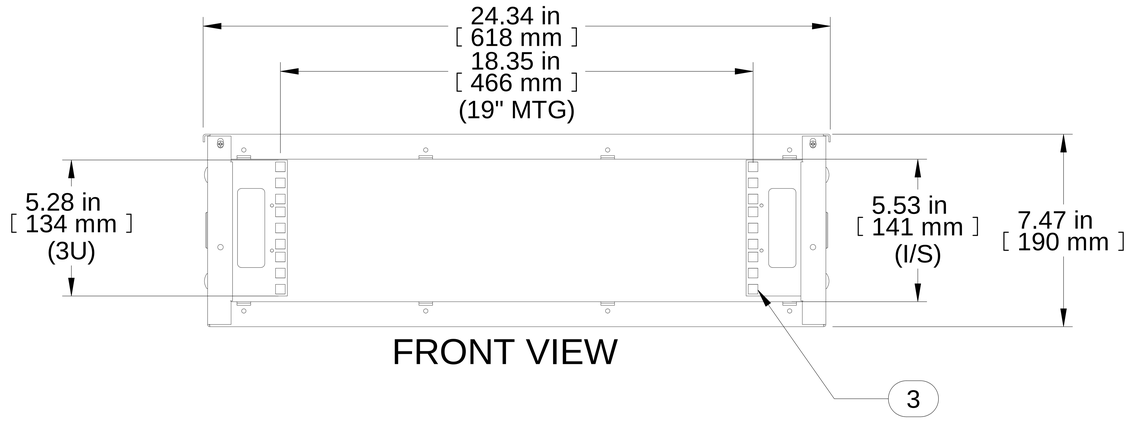

FRONT VIEW

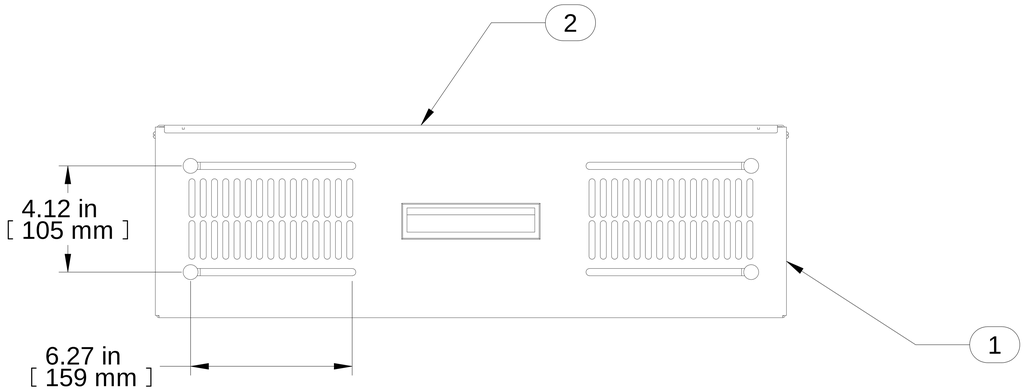

R.S. VIEW

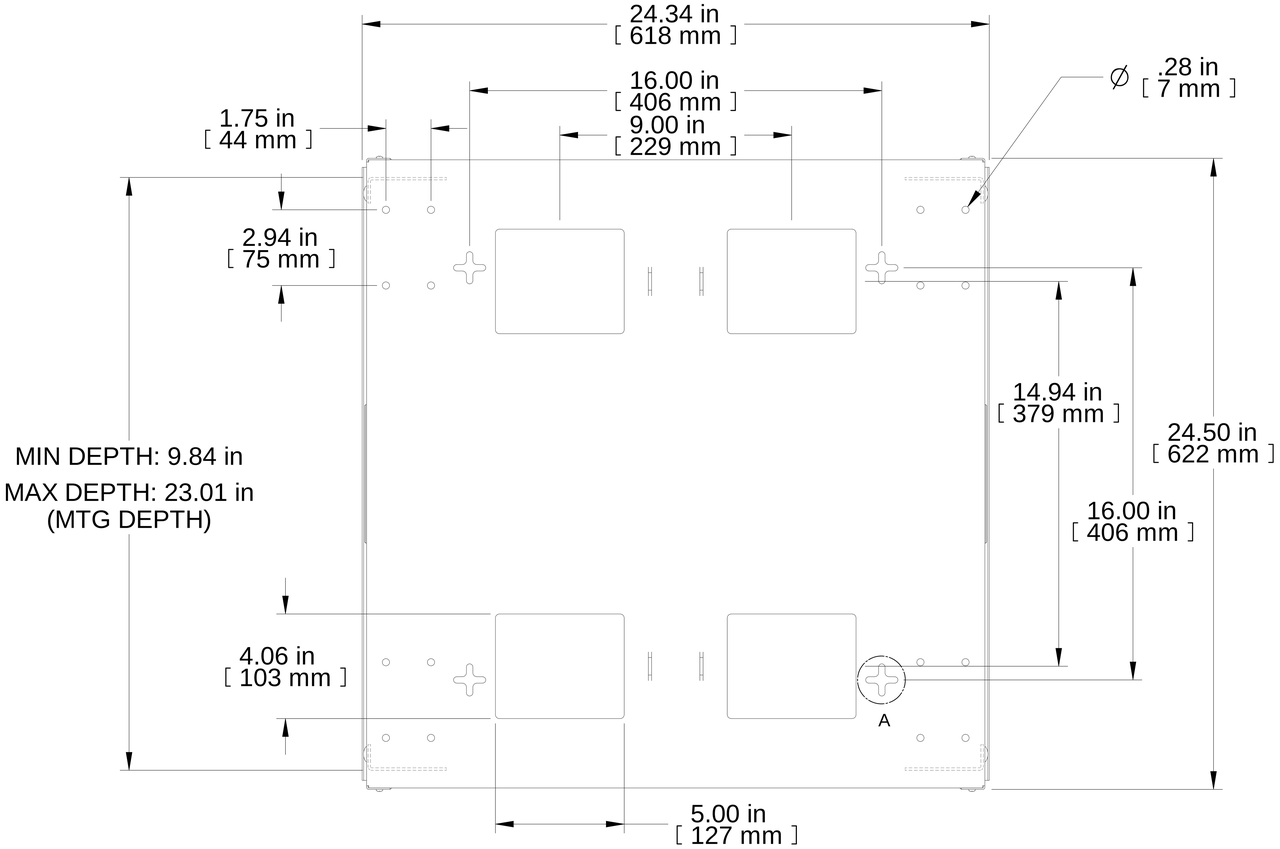

BOTTOM VIEW

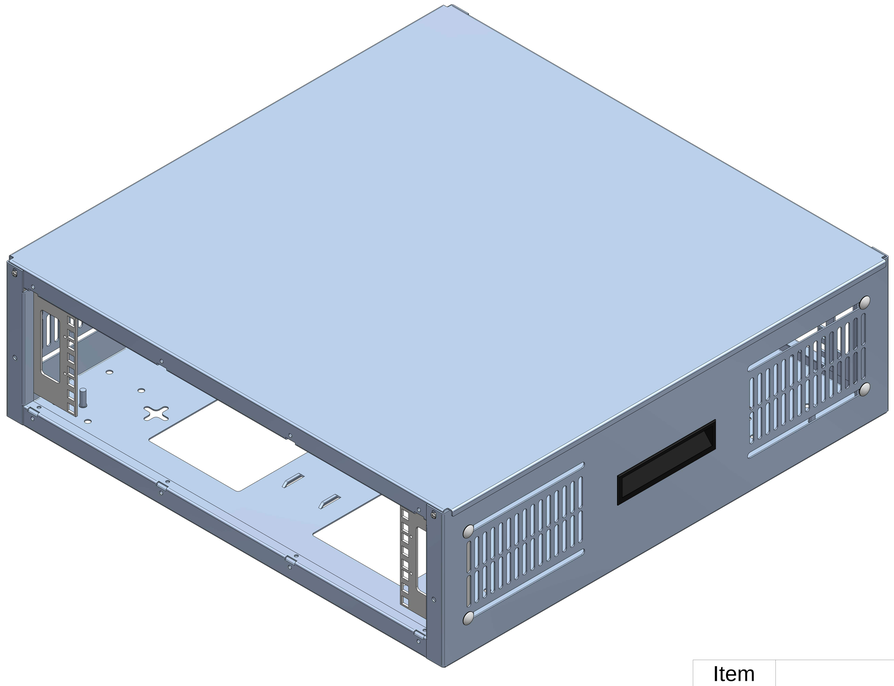

ISOMETRIC

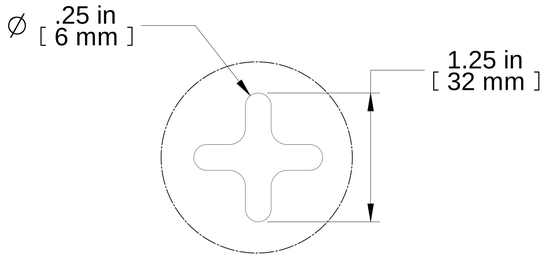

DETAIL A
SCALE 4:1

Item Number	Title	Quantity
1	SDC - BODY	1
2	SDC COVER ASSEMBLY	1
3	RAIL	4

PART NUMBERS

SDC243U24	PAINTED BLACK TEXTURED

NOTES

Assembly Hardware Included
Mounting Hardware Not Included
See Hammond Website for Accessories (Door/Panel)

Français

Pour tous les détails sur nos produits,
svp veuillez consulter notre site www.hammondmfg.com

Data subject to change without notice. Isometric drawing not to scale.
Les données sont sujettes à changement sans préavis.

HAMMOND MANUFACTURING®

www.hammondmfg.com

PART NO. **SDC243U24BK**