G6TAAT0-ED08SN-0000

series_t, Receptacle, mil_standard_38999

General information

Part number	G6TAAT0-ED08SN-0000
Termination	crimp
Size	9 (STD 38999)
Locking principle	break , push , screw
Coding	a_key_amc
Cable Diameter	cable_amc_t_e
Cable outlet	overmolding

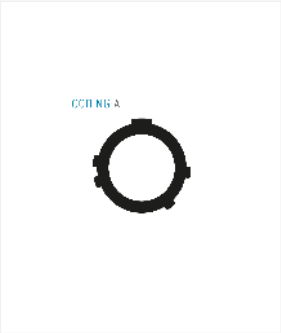

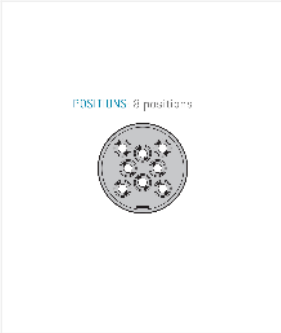

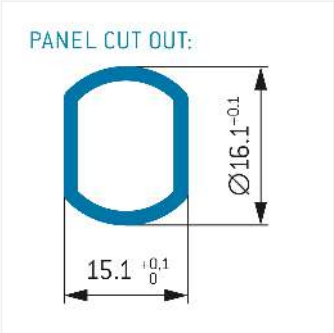

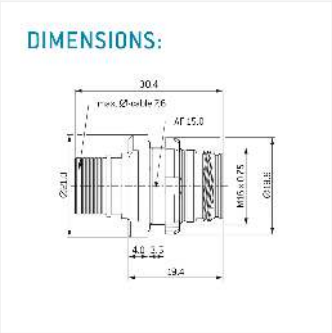

Contact insert description

Number of contacts	8
Contact type	sockets
Contact diameter	076mm
Insulator material	peek
Wire cross section	22-26_awg
Termination	crimp

Technical information

Nominal current single contact	05_a	iec_60512_5_2
Test voltage	075_kv_ac	eia_364_20f

safety_text

Mechanical and environmental data

Degree of protection*	ip6k9k
Operating temperature	65_175_c
Mating cycles	500

mated

Material and surface treatments

Housing	alu_tin_nickel
Contact	cu_alloy_gold

data_text

safety_text_2
data_text
ul_text
illustrative_text