MATERIAL NO.	ENGINEERING NO.	FINISHED LENGTH
1300240058	DN09A-M005	0.5M (1 FT 7.70 IN)
1300240065	DN09A-M080	8M (26 FT 3 IN)
1300240067	DN09A-M160	16M (52 FT 6 IN)

PART NUMBER LEGEND

DN09A-M010

FINISHED LENGTH
M005= 0.5 M
M010= 1 M
M100= 10M

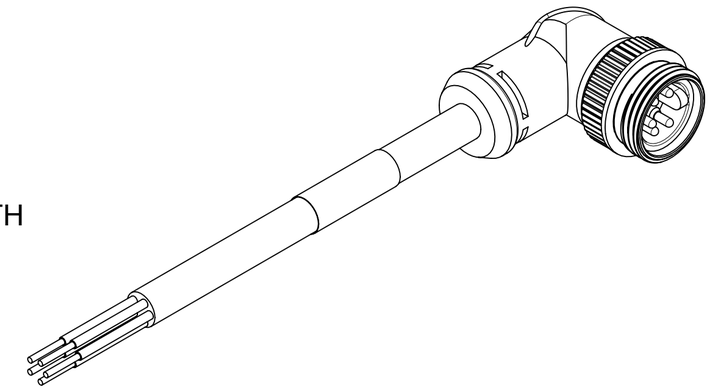

WIRING DIAGRAM

P1

1	DRAIN
2	RED
3	BLACK
4	WHITE
5	BLUE

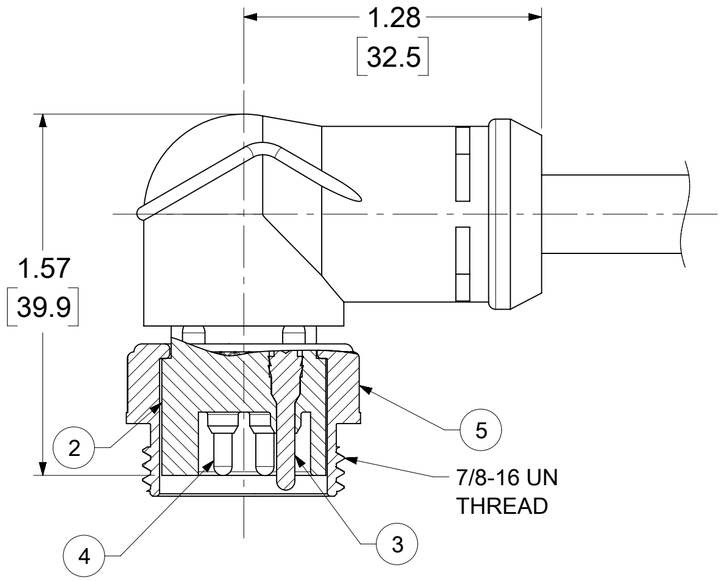

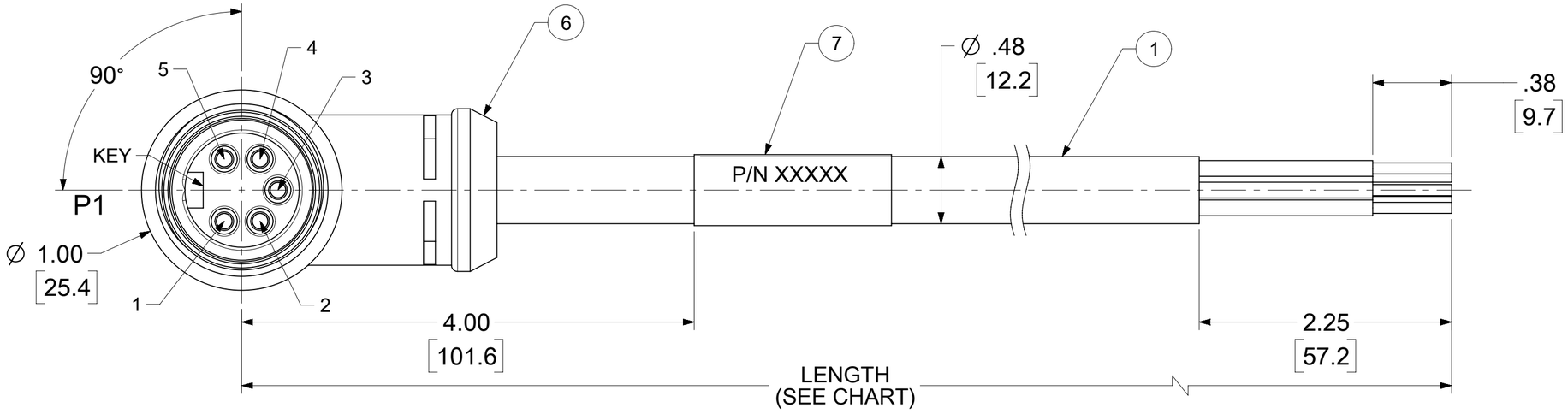

NOTES:
1. MATERIAL: AS NOTED
2. FINISH: AS NOTED
3. ELECTRICAL:
   VOLTAGE: 300V PER IEC60664
   300V PER UL2238
   CURRENT: 4A
4. TEMP RATING: -20°C TO +80°C
5. PROTECTION: IP67 (WHEN MATED)
6. UL RECOGNIZED FILE: E152210
   CSA CERTIFIED FILE: LR6837
7. ALL DIMS ARE FOR REFERENCE UNLESS TOLERANCED OR NOTED OTHERWISE

CABLE LENGTH TOLERANCES
<.3M [1FT]: +19mm-0 [+.75in-0]
.3 - .9M [1 - 3FT]: +44.5mm-0 [+1.75in-0]
.9 - 1.8M [3 - 6FT]: +55.6mm-0 [+2.19in-0]
1.8 - 3.7M [6 - 12FT: +88.9mm-0 [+3.50in-0]
3.7 - 7.3M [12 - 24FT]: +165.1mm-0 [+6.50in-0]
7.3-14.6M [24 - 48FT]: +317.5mm-0 [+12.50in-0]
14.6 - 30.5M [48-100FT]: +622.3mm-0 [+24.50in-0]
OVER 30M [100FT] +2% OF FINISHED LENGTH

ITEM	DESCRIPTION	MATERIAL	FINISH	
7	WRAP LABEL	VINYL	BLACK/YELLOW	
6	OVERMOLD	TPE	GRAY	B
5	COUPLING NUT	ZINC DIE CAST	BLACK E-COAT	
4	CONTACT PIN, 18 AWG	BRASS	GOLD OVER NICKEL	
3	CONTACT PIN, 16 AWG	BRASS	GOLD OVER NICKEL	
2	MALE INSERT	TPE	BLACK	B
1	CABLE, DEV-NET, TRUNK, 18/2, 15/2	PVC JACKET	GRAY	

DOCUMENT STATUS	P1	RELEASE DATE	2022/09/09 18:08:11

THIS DRAWING CONTAINS INFORMATION THAT IS PROPRIETARY TO MOLEX ELECTRONIC TECHNOLOGIES, LLC AND SHOULD NOT BE USED WITHOUT WRITTEN PERMISSION

FUNCTIONAL SYMBOLS
FA = 0
FC = 0
FP = 0
DIVISIONAL SYMBOLS

DIMENSION UNITS: INCH/MM
SCALE: NTS

GENERAL TOLERANCES (UNLESS SPECIFIED)

	MM	INCH
4 PLACES	±	±
3 PLACES	±	±
2 PLACES	±	±
1 PLACE	±	±
0 PLACES	±	±
ANGULAR TOL	± °	

DRAFT WHERE APPLICABLE MUST REMAIN WITHIN DIMENSIONS

CURRENT REV DESC: ITEM 2 & 6 WERE PVC.

EC NO: 720800
DRWN: VBASUTHKARP 2022/07/11
CHK'D: RSTONE 2022/09/09
APPR: BWOODMAN 2022/09/09

INITIAL REVISION:
DRWN: RSTONE 2009/04/27
APPR: JFMURPHY 2009/04/30

THIRD ANGLE PROJECTION | DRAWING: C-SIZE | SERIES: 130024

molex

MINI-CHANGE DEVICENET, A-SIZE
5 POLE, MALE, 90 DEG, SINGLE KEY, 15/18 AWG

PRODUCT CUSTOMER DRAWING

DOCUMENT NUMBER	DOC TYPE	DOC PART	REVISION
SD-130024-002	PSD	001	B

MATERIAL NUMBER	CUSTOMER	SHEET NUMBER
SEE TABLE	GENERAL MARKET	1 OF 1

FORMAT: Eng-tega-master-lb-prod-C
REVISION: E1
DATE: 2021/05/01