MECHATRONICS®

# UF9029 series

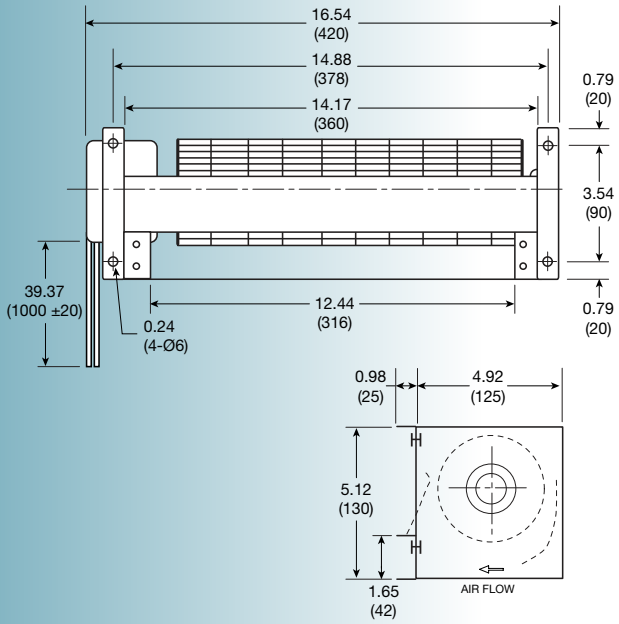


**Size: (420 mm x 150 mm x 130 mm)**
**16.54 x 5.91 x 5.12 inches**

*Features:* cross flow blower
*Operating voltage (VAC):* 120 or 230
*Operating temp:* -40° to 70° C
*Construction:* steel frame with plastic
*Bearing option:* ball bearing
*Motor:* permanent split capacitor
*Connection:* 22 AWG lead wires
*Protection:* thermal
*Insulation:* Class B

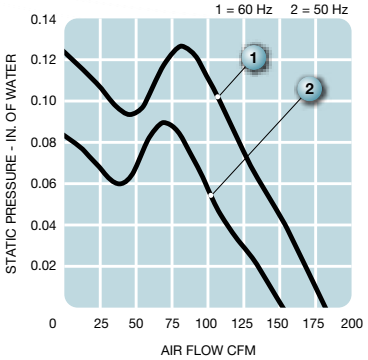


| Model No. | Rated Voltage V | Freq. HZ | Input Power W | Rated Cur. A | Locked Cur. A | Speed RPM | Air Volume | | Max. Static Pressure ($H_2O$) | | Sound Noise dbA | Weight kg |
|---|---|---|---|---|---|---|---|---|---|---|---|---|
| | | | | | | | M³/Min. | CFM | MM | INCH | | |
| **UF9029CBP12H-L** | 120 | 50 | 33 | 0.28 | 0.40 | 1350 | 4.5 | 159 | 2.2 | 0.09 | 43 | 3.0 |
| | 120 | 60 | 31 | 0.27 | 0.40 | 1560 | 5.0 | 177 | 3.3 | 0.13 | 46 | 3.0 |
| **UF9029CBP23H-L** | 230 | 50 | 33 | 0.14 | 0.20 | 1350 | 4.5 | 159 | 2.2 | 0.09 | 43 | 3.0 |
| | 230 | 60 | 31 | 0.13 | 0.19 | 1560 | 5.0 | 177 | 3.3 | 0.13 | 46 | 3.0 |


www.mechatronics.com E-mail: Sales@Mechatronics.com Fax: 425-222-5155 Tel: 425-222-5900 800-453-4569
03/08/11