Quad Digitally Controlled (XDCP™) Potentiometers

Description

The X9408 integrates four digitally controlled potentiometers (XDCP) on a monolithic CMOS integrated circuit.

The digital controlled potentiometer is implemented using 63 resistive elements in a series array. Between each element are tap points connected to the wiper terminal through switches. The position of the wiper on the array is controlled by the user through the 2-wire bus interface. Each potentiometer has associated with it a volatile Wiper Counter Register (WCR) and four non-volatile Data Registers that can be directly written to and read by the user. The contents of the WCR controls the position of the wiper on the resistor array though the switches. Power-up recalls the contents of the default data register (DR0) to the WCR.

The XDCP can be used as a three-terminal potentiometer or as a two terminal variable resistor in a wide variety of applications including control, parameter adjustments, and signal processing.

Features

- Four Potentiometers in One Package
- 64 Resistor Taps per Potentiometer
- 2-wire Serial Interface
- Wiper Resistance, 40Ω Typical at 5V
- Four Nonvolatile Data Registers for Each Pot
- Nonvolatile Storage of Wiper Position
- Standby Current < 1µA max (Total Package)
- V_{CC} = 2.7V to 5.5V Operation
  V+ = 2.7V to 5.5V
  V- = -2.7V to -5.5V
- 10kΩ, 2.5kΩ End to End Resistances
- High reliability
- Endurance–100,000 Data Changes Per Bit Per Register
- Register Data Retention–100 years
- 24 Ld SOIC, 24 Ld TSSOP, 24 Ld PDIP Packages
- Pb-Free (RoHS Compliant)

Block Diagram

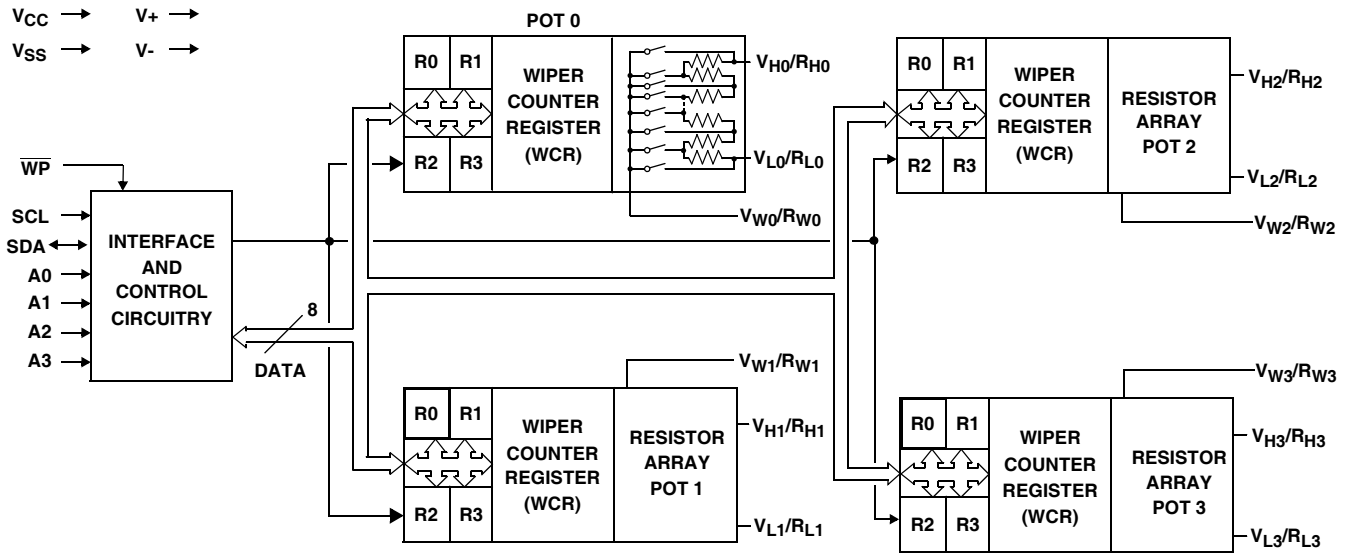

CAUTION: These devices are sensitive to electrostatic discharge; follow proper IC Handling Procedures.
1-888-INTERSIL or 1-888-468-3774 | Intersil (and design) is a registered trademark of Intersil Americas Inc.
XDCP is a trademark of Intersil Americas Inc. Copyright Intersil Americas Inc. 2005, 2009. All Rights Reserved
All other trademarks mentioned are the property of their respective owners.

Ordering Information

PART NUMBER	PART MARKING	V_{CC} LIMITS (V)	POTENTIOMETER ORGANIZATION (kΩ)	TEMP RANGE (°C)	PACKAGE
X9408YS24*	X9408YS	5 ±10%	2.5	0 to +70	24 Ld SOIC (300 mil)
X9408YS24I*	X9408YS I			-40 to +85	24 Ld SOIC (300 mil)
X9408YV24*	X9408YV			0 to +70	24 Ld TSSOP (4.4mm)
X9408YV24Z* (Note)	X9408YV Z			0 to +70	24 Ld TSSOP (4.4mm) (Pb-Free)
X9408YV24I*	X9408YV I			-40 to +85	24 Ld TSSOP (4.4mm)
X9408YV24IZ* (Note)	X9408YV Z I			-40 to +85	24 Ld TSSOP (4.4mm) (Pb-Free)
X9408WS24*	X9408WS		10	0 to +70	24 Ld SOIC (300 mil)
X9408WS24I*	X9408WS I			-40 to +85	24 Ld SOIC (300 mil)
X9408WV24*	X9408WV			0 to +70	24 Ld TSSOP (4.4mm)
X9408WV24Z* (Note)	X9408WV Z			0 to +70	24 Ld TSSOP (4.4mm) (Pb-Free)
X9408WV24I*	X9408WV I			-40 to +85	24 Ld TSSOP (4.4mm)
X9408WV24IZ* (Note)	X9408WV Z I			-40 to +85	24 Ld TSSOP (4.4mm) (Pb-Free)
X9408YS24-2.7*	X9408YS F	2.7 to 5.5	2.5	0 to +70	24 Ld SOIC (300 mil)
X9408YS24I-2.7*	X9408YS G			-40 to +85	24 Ld SOIC (300 mil)
X9408YV24-2.7*	X9408YV F			0 to +70	24 Ld TSSOP (4.4mm)
X9408YV24Z-2.7* (Note)	X9408YV Z F			0 to +70	24 Ld TSSOP (4.4mm) (Pb-Free)
X9408YV24I-2.7*	X9408YV G			-40 to +85	24 Ld TSSOP (4.4mm)
X9408YV24IZ-2.7T1 (Note)	X9408YV Z G			-40 to +85	24 Ld TSSOP (4.4mm) Tape and Reel (Pb-Free)
X9408WS24-2.7*	X9408WS F		10	0 to +70	24 Ld SOIC (300 mil)
X9408WS24I-2.7*	X9408WS G			-40 to +85	24 Ld SOIC (300 mil)
X9408WS24IZ-2.7* (Note)	X9408WS Z G			-40 to +85	24 Ld SOIC (300 mil) (Pb-Free)
X9408WV24-2.7*	X9408WV F			0 to +70	24 Ld TSSOP (4.4mm)
X9408WV24Z-2.7* (Note)	X9408WV Z F			0 to +70	24 Ld TSSOP (4.4mm) (Pb-Free)
X9408WV24I-2.7*	X9408WV G			-40 to +85	24 Ld TSSOP (4.4mm)
X9408WV24IZ-2.7* (Note)	X9408WV Z G			-40 to +85	24 Ld TSSOP (4.4mm) (Pb-Free)

*Add "T1" suffix for tape and reel. **Add "T1" suffix for tape and reel.Please refer to TB347 for details on reel specifications.

NOTE: These Intersil Pb-free plastic packaged products employ special Pb-free material sets, molding compounds/die attach materials, and 100% matte tin plate plus anneal (e3 termination finish, which is RoHS compliant and compatible with both SnPb and Pb-free soldering operations). Intersil Pb-free products are MSL classified at Pb-free peak reflow temperatures that meet or exceed the Pb-free requirements of IPC/JEDEC J STD-020.

Pin Descriptions

Host Interface Pins

SERIAL CLOCK (SCL)

The SCL input is used to clock data into and out of the X9408.

SERIAL DATA (SDA)

SDA is a bidirectional pin used to transfer data into and out of the device. It is an open drain output and may be wire-ORed with any number of open drain or open collector outputs. An open drain output requires the use of a pull-up resistor. For selecting typical values, refer to the guidelines for calculating typical values on the bus pull-up resistors graph.

DEVICE ADDRESS (A_0 - A_3)

The address inputs are used to set the least significant 4 bits of the 8-bit slave address. A match in the slave address serial data stream must be made with the address input in order to initiate communication with the X9408. A maximum of 16 devices may occupy the 2-wire serial bus.

Potentiometer Pins

V_H/R_H (V_{H0}/R_{H0} - V_{H3}/R_{H3}), V_L/R_L (V_{L0}/R_{L0} - V_{L3}/R_{L3})

The V_H/R_H and V_L/R_L inputs are equivalent to the terminal connections on either end of a mechanical potentiometer.

V_W/R_W (V_{W0}/R_{W0} – V_{W3}/R_{W3})

The wiper outputs are equivalent to the wiper output of a mechanical potentiometer.

HARDWARE WRITE PROTECT INPUT ($\overline{WP}$)

The $\overline{WP}$ pin when low prevents nonvolatile writes to the Data Registers.

ANALOG SUPPLIES V+, V-

The Analog Supplies V+, V- are the supply voltages for the XDCP analog section.

Pin Assignments

SYMBOL	DESCRIPTION
SCL	Serial Clock
SDA	Serial Data
A0-A3	Device Address
V_{H0}/R_{H0} - V_{H3}/R_{H3}, V_{L0}/R_{L0} - V_{L3}/R_{L3}	Potentiometer Pins (terminal equivalent)
V_{W0}/R_{W0} - V_{W3}/R_{W3}	Potentiometer Pins (wiper equivalent)
$\overline{WP}$	Hardware Write Protection
V+,V-	Analog Supplies
V_{CC}	System Supply Voltage
V_{SS}	System Ground
NC	No Connection

Pinouts

X9408
(24 LD DIP/SOIC)
TOP VIEW

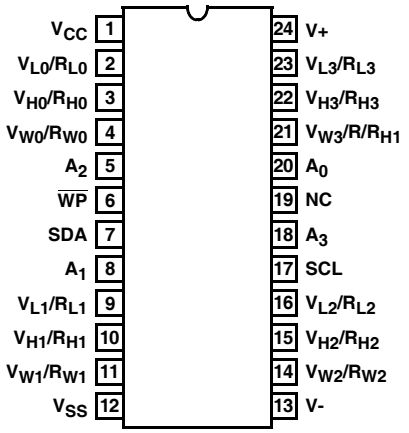

X9408
(24 LD TSSOP)
TOP VIEW

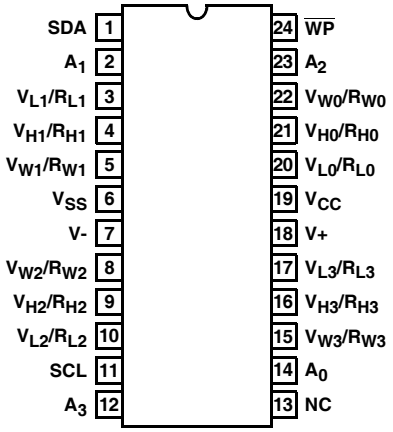

Principals of Operation

The X9408 is a highly integrated microcircuit incorporating four resistor arrays and their associated registers and counters and the serial interface logic providing direct communication between the host and the XDCP potentiometers.

Serial Interface

The X9408 supports a bidirectional bus oriented protocol. The protocol defines any device that sends data onto the bus as a transmitter and the receiving device as the receiver. The device controlling the transfer is a master and the device being controlled is the slave. The master will always initiate data transfers and provide the clock for both transmit and receive operations. Therefore, the X9408 will be considered a slave device in all applications.

Clock and Data Conventions

Data states on the SDA line can change only during SCL LOW periods (t_{LOW}). SDA state changes during SCL HIGH are reserved for indicating start and stop conditions.

Start Condition

All commands to the X9408 are preceded by the start condition, which is a HIGH to LOW transition of SDA while SCL is HIGH (t_{HIGH}). The X9408 continuously monitors the SDA and SCL lines for the start condition and will not respond to any command until this condition is met.

Stop Condition

All communications must be terminated by a stop condition, which is a LOW to HIGH transition of SDA while SCL is HIGH.

Acknowledge

Acknowledge is a software convention used to provide a positive handshake between the master and slave devices on the bus to indicate the successful receipt of data. The transmitting device, either the master or the slave, will release the SDA bus after transmitting eight bits. The master generates a ninth clock cycle and during this period the receiver pulls the SDA line LOW to acknowledge that it successfully received the eight bits of data.

The X9408 will respond with an acknowledge after recognition of a start condition and its slave address and once again after successful receipt of the command byte. If the command is followed by a data byte the X9408 will respond with a final acknowledge.

Array Description

The X9408 is comprised of four resistor arrays. Each array contains 63 discrete resistive segments that are connected in series. The physical ends of each array are equivalent to the fixed terminals of a mechanical potentiometer (R_H and R_L inputs).

At both ends of each array and between each resistor segment is a CMOS switch connected to the wiper (R_W) output. Within each individual array only one switch may be turned on at a time. These switches are controlled by the Wiper Counter Register (WCR). The six bits of the WCR are decoded to select, and enable, one of sixty-four switches.

The WCR may be written directly, or it can be changed by transferring the contents of one of four associated Data Registers into the WCR. These Data Registers and the WCR can be read and written by the host system.

Device Addressing

Following a start condition the master must output the address of the slave it is accessing. The most significant four bits of the slave address are the device type identifier (refer to Figure 1 below). For the X9408 this is fixed as 0101[B].

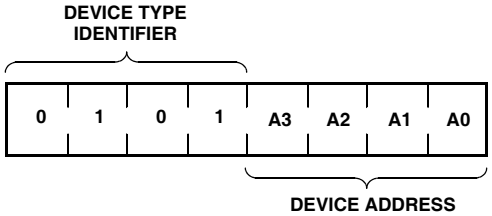

FIGURE 1. SLAVE ADDRESS

The next four bits of the slave address are the device address. The physical device address is defined by the state of the A_0 - A_3 inputs. The X9408 compares the serial data stream with the address input state; a successful compare of all four address bits is required for the X9408 to respond with an acknowledge. The A_0 - A_3 inputs can be actively driven by CMOS input signals or tied to V_{CC} or V_{SS}.

Acknowledge Polling

The disabling of the inputs, during the internal Nonvolatile write operation, can be used to take advantage of the typical 5ms EEPROM write cycle time. Once the stop condition is issued to indicate the end of the nonvolatile write command the X9408 initiates the internal write cycle. ACK polling can be initiated immediately. This involves issuing the start condition followed by the device slave address. If the X9408 is still busy with the write operation no ACK will be returned. If the X9408 has completed the write operation an ACK will be returned and the master can then proceed with the next operation.

Flow 1. ACK Polling Sequence

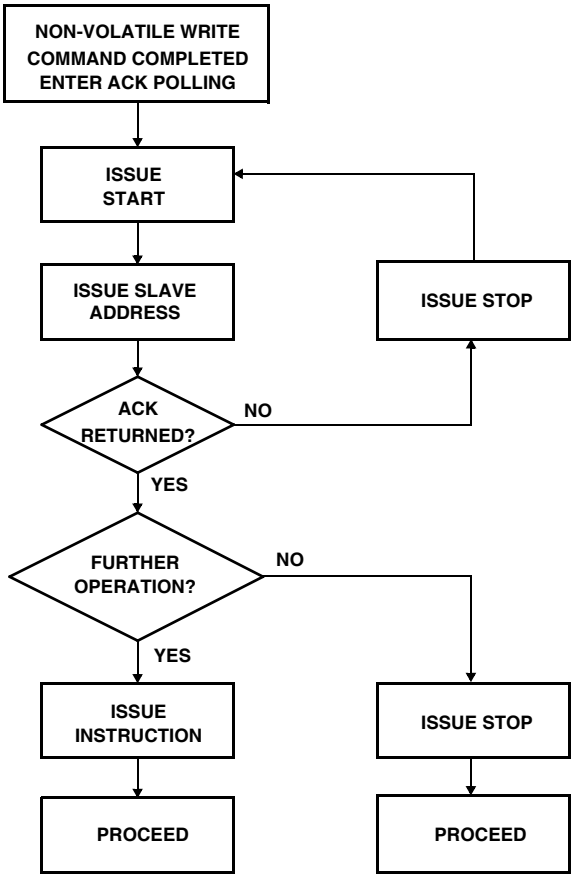

Instruction Structure

The next byte sent to the X9408 contains the instruction and register pointer information. The four most significant bits are the instruction. The next four bits point to one of the two pots and when applicable they point to one of four associated registers. The format is shown in Figure 2.

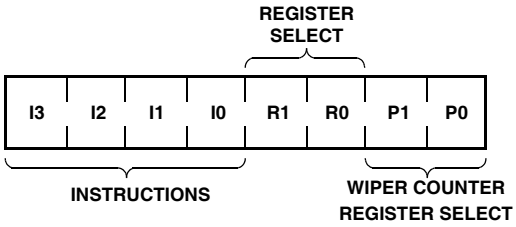

FIGURE 2. INSTRUCTION BYTE FORMAT

The four high order bits define the instruction. The next two bits (R1 and R0) select one of the four registers that is to be acted upon when a register oriented instruction is issued. The last bits (P1, P0) select which one of the four potentiometers is to be affected by the instruction.

Four of the nine instructions end with the transmission of the instruction byte. The basic sequence is illustrated in Figure 3. These two-byte instructions exchange data between the Wiper Counter Register and one of the Data Registers. A transfer from a Data Register to a Wiper Counter Register is essentially a write to a static RAM. The response of the wiper to this action will be delayed t_{WRL}. A transfer from the Wiper Counter Register (current wiper position), to a data register is a write to nonvolatile memory and takes a minimum of t_{WR} to complete. The transfer can occur between one of the four potentiometers and one of its associated registers; or it may occur globally, wherein the transfer occurs between all of the potentiometers and one of their associated registers.

Four instructions require a three-byte sequence to complete. These instructions transfer data between the host and the X9408; either between the host and one of the data registers or directly between the host and the Wiper Counter Register. These instructions are: Read Wiper Counter Register (read the current wiper position of the selected pot), Write Wiper Counter Register (change current wiper position of the selected pot), Read Data Register (read the contents of the selected nonvolatile register) and Write Data Register (write a new value to the selected Data Register). The sequence of operations is shown in Figure 4.

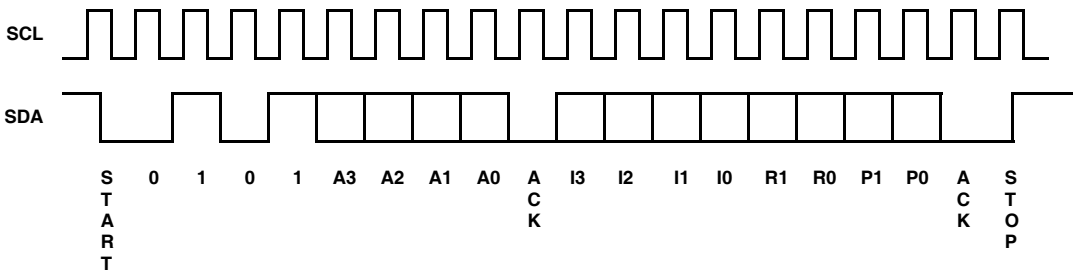

FIGURE 3. TWO-BYTE INSTRUCTION SEQUENCE

The Increment/Decrement command is different from the other commands. Once the command is issued and the X9408 has responded with an acknowledge, the master can clock the selected wiper up and/or down in one segment steps; thereby, providing a fine tuning capability to the host. For each SCL clock pulse (t_{HIGH}) while SDA is HIGH, the selected wiper will move one resistor segment towards the R_H terminal. Similarly, for each SCL clock pulse while SDA is LOW, the selected wiper will move one resistor segment towards the R_L terminal. A detailed illustration of the sequence and timing for this operation are shown in Figures 5 and 6 respectively.

TABLE 1. INSTRUCTION SET

INSTRUCTION	INSTRUCTION SET								OPERATION
	I_3	I_2	I_1	I_0	R_1	R_0	P_1	P_0	
Read Wiper CounterRegister	1	0	0	1	0	0	P_1	P_0	Read the contents of the Wiper Counter Register pointed to by P_1 - P_0
Write Wiper CounterRegister	1	0	1	0	0	0	P_1	P_0	Write new value to the Wiper Counter Register pointed to by P_1 - P_0
Read Data Register	1	0	1	1	R_1	R_0	P_1	P_0	Read the contents of the Data Register pointed to by P_1 - P_0 and R_1 - R_0
Write Data Register	1	1	0	0	R_1	R_0	P_1	P_0	Write new value to the Data Register pointed to by P_1 - P_0 and R_1 - R_0
XFR Data Register to Wiper Counter Register	1	1	0	1	R_1	R_0	P_1	P_0	Transfer the contents of the Data Register pointed to by P_1 - P_0 and R_1 - R_0 to its associated Wiper Counter Register
XFR Wiper Counter Register to Data Register	1	1	1	0	R_1	R_0	P_1	P_0	Transfer the contents of the Wiper Counter Register pointed to by P_1 - P_0 to the Data Register pointed to by R_1 - R_0
Global XFR Data Registers to Wiper Counter Registers	0	0	0	1	R_1	R_0	0	0	Transfer the contents of the Data Registers pointed to by R_1 - R_0 of all four pots to their respective Wiper Counter Registers
Global XFR Wiper Counter Registers to Data Register	1	0	0	0	R_1	R_0	0	0	Transfer the contents of both Wiper Counter Registers to their respective Data Registers pointed to by R_1 - R_0 of all four pots
Increment/Decrement Wiper Counter Register	0	0	1	0	0	0	P_1	P_0	Enable Increment/decrement of the Wiper Counter Register pointed to by P_1 - P_0

NOTE: (7)1/0 = data is one or zero

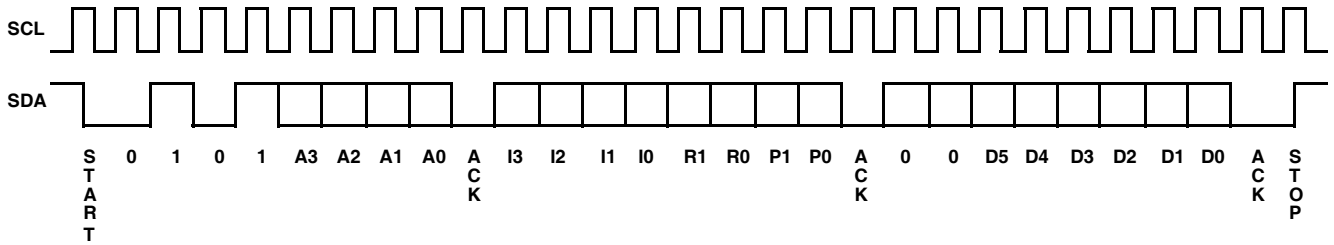

FIGURE 4. THREE-BYTE INSTRUCTION SEQUENCE

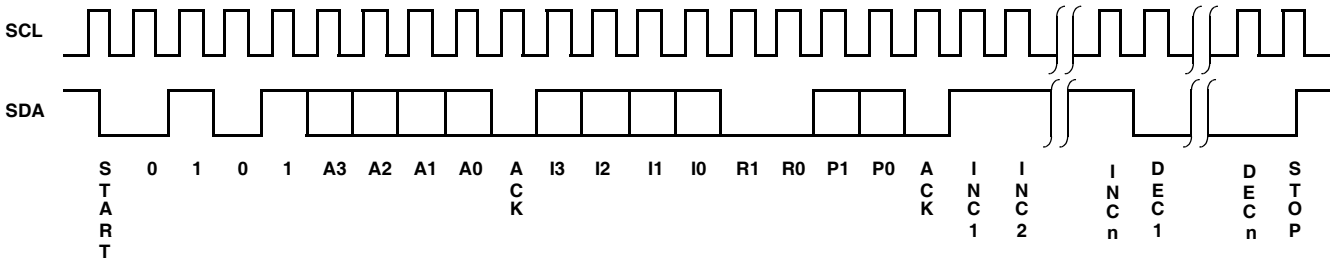

FIGURE 5. INCREMENT/DECREMENT INSTRUCTION SEQUENCE

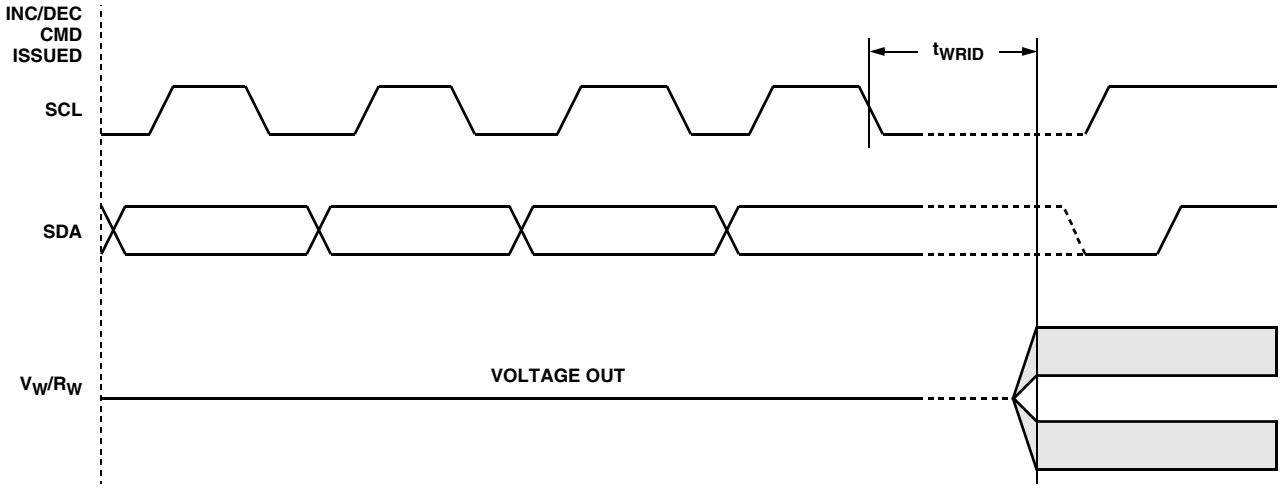

FIGURE 6. INCREMENT/DECREMENT TIMING LIMITS

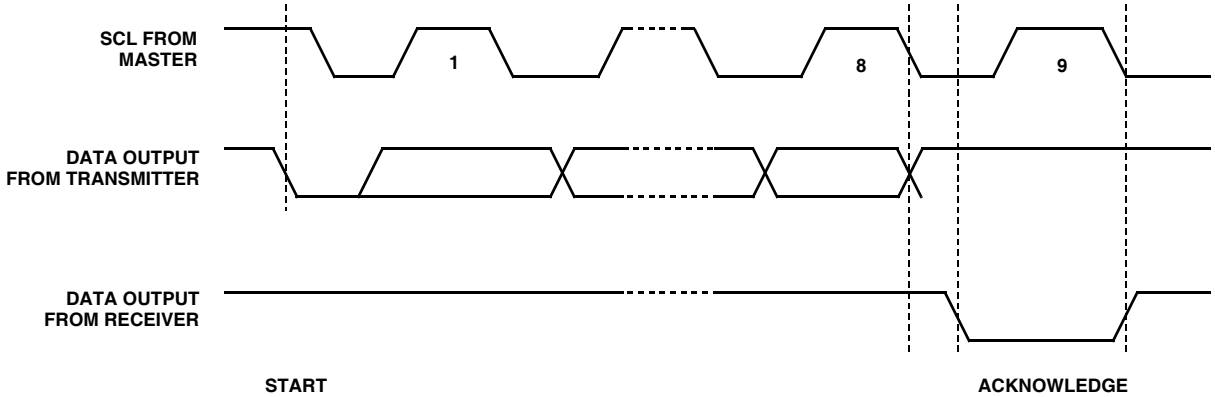

FIGURE 7. ACKNOWLEDGE RESPNSE FROM RECEIVER

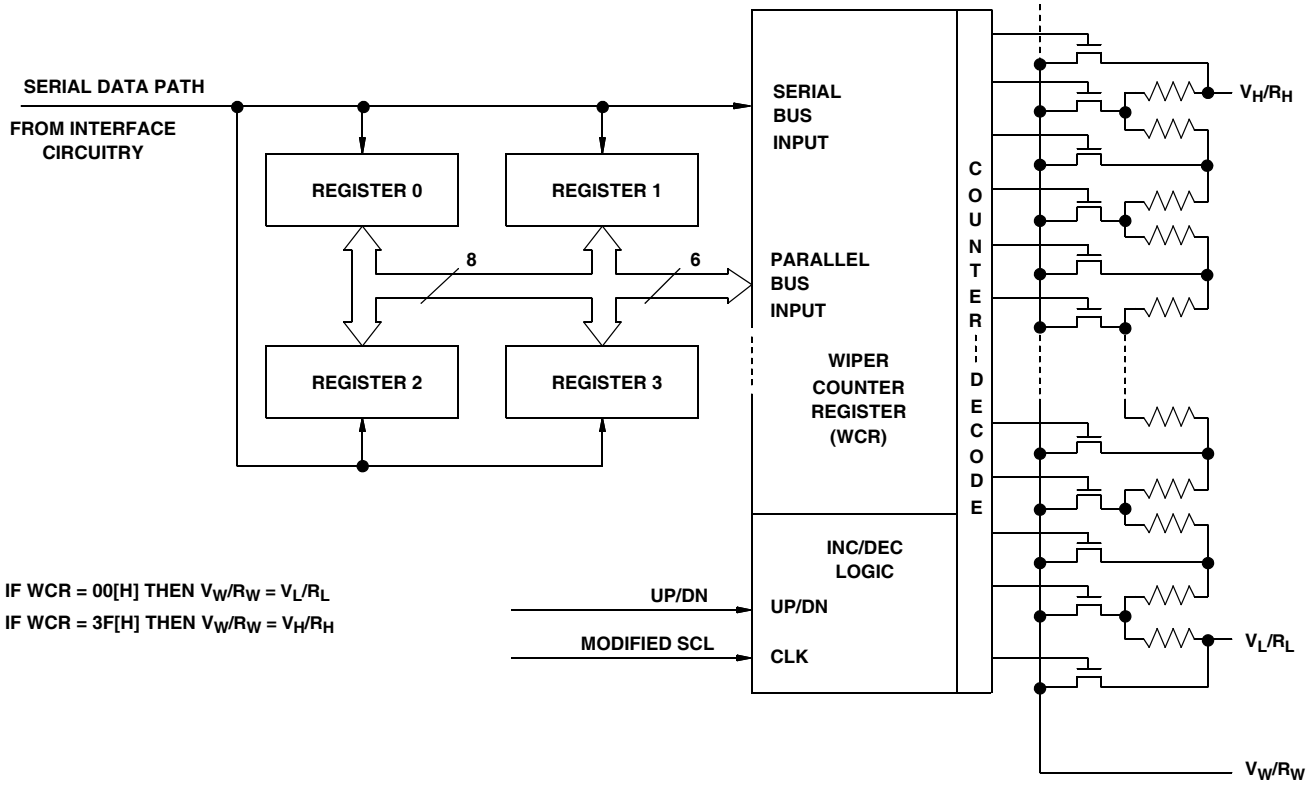

FIGURE 8. DETAILED POTENTIOMETER BLOCK DIAGRAM

Detailed Operation

All XDCP potentiometers share the serial interface and share a common architecture. Each potentiometer has a Wiper Counter Register and four Data Registers. A detailed discussion of the register organization and array operation follows.

Wiper Counter Register

The X9408 contains four Wiper Counter Registers, one for each XDCP potentiometer. The Wiper Counter Register can be envisioned as a 6-bit parallel and serial load counter with its outputs decoded to select one of sixty-four switches along its resistor array. The contents of the WCR can be altered in four ways: it may be written directly by the host via the Write Wiper Counter Register instruction (serial load); it may be written indirectly by transferring the contents of one of four associated data registers via the XFR Data Register instruction (parallel load); it can be modified one step at a time by the Increment/ Decrement instruction. Finally, it is loaded with the contents of its data register zero (DR0) upon power-up.

The WCR is a volatile register; that is, its contents are lost when the X9408 is powered-down. Although the register is automatically loaded with the value in R0 upon power-up, it should be noted this may be different from the value present at power-down.

Data Registers

Each potentiometer has four nonvolatile Data Registers. These can be read or written directly by the host and data can be transferred between any of the four Data Registers and the WCR. It should be noted all operations changing data in one of these registers is a nonvolatile operation and will take a maximum of 10ms.

If the application does not require storage of multiple settings for the potentiometer, these registers can be used as regular memory locations that could possibly store system parameters or user preference data.

Register Descriptions

TABLE 2. DATE REGISTERS, (6-BIT), NONVOLATILE

D5	D4	D3	D2	D1	D0
NV	NV	NV	NV	NV	NV
(MSB)					(LSB)

Four 6-bit Data Registers for each XDCP. (sixteen 6-bit registers in total). {D5~D0}: These bits are for general purpose not volatile data storage or for storage of up to four different wiper values. The contents of Data Register 0 are automatically moved to the wiper counter register on power-up.

TABLE 3. WIPER COUNTER REGISTER, (6-BIT), VOLATILE

WP5	WP4	WP3	WP2	WP1	WP0
V	V	V	V	V	V
(MSB)					(LSB)

One 6-bit Wiper Counter Register for each XDCP. (Four 6-bit registers in total.)

{D5~D0}: These bits specify the wiper position of the respective XDCP. The Wiper Counter Register is loaded on power-up by the value in Data Register 0. The contents of the WCR can be loaded from any of the other Data Register or directly. The contents of the WCR can be saved in a DR.

Instruction Format

NOTES:

1. “MACK”/”SACK”: stands for the acknowledge sent by the master/slave.
2. “A3 ~ A0”: stands for the device addresses sent by the master.
3. “X”: indicates that it is a “0” for testing purpose but physically it is a “don’t care” condition.
4. “I”: stands for the increment operation, SDA held high during active SCL phase (high).
5. “D”: stands for the decrement operation, SDA held low during active SCL phase (high).

Read Wiper Counter Register (WCR)

START	DEVICE TYPE IDENTIFIER				DEVICE ADDRESSES				SACK	INSTRUCTION OPCODE				WCR ADDRESSES				SACK	WIPER POSITION (SENT BY SLAVE ON SDA)								MACK	STOP
	0	1	0	1	A3	A2	A1	A0		1	0	0	1	0	0	P1	P0		0	0	WP5	WP4	WP3	WP2	WP1	WP0		

Write Wiper Counter Register (WCR)

START	DEVICE TYPE IDENTIFIER				DEVICE ADDRESSES				SACK	INSTRUCTION OPCODE				WCR ADDRESSES				SACK	WIPER POSITION (SENT BY MASTER ON SDA)								SACK	STOP
	0	1	0	1	A3	A2	A1	A0		1	0	1	0	0	0	P1	P0		0	0	WP5	WP4	WP3	WP2	WP1	WP0		

Read Data Register (DR)

START	DEVICE TYPE IDENTIFIER				DEVICE ADDRESSES				SACK	INSTRUCTION OPCODE				DR AND WCR ADDRESSES				SACK	WIPER POSITION/DATA (SENT BY SLAVE ON SDA)								MACK	STOP
	0	1	0	1	A3	A2	A1	A0		1	0	1	1	R1	R0	P1	P0		0	0	WP5	WP4	WP3	WP2	WP1	WP0		

Write Data Register (DR)

START	DEVICE TYPE IDENTIFIER				DEVICE ADDRESSES				SACK	INSTRUCTION OPCODE				DR AND WCR ADDRESSES				SACK	WIPER POSITION/DATA (SENT BY MASTER ON SDA)								SACK	STOP	
	0	1	0	1	A3	A2	A1	A0		1	1	0	0	R1	R0	P1	P0		0	0	WP5	WP4	WP3	WP2	WP1	WP0			HIGH-VOLTAGE WRITE CYCLE

XFR Data Register (DR) to Wiper Counter Register (WCR)

START	DEVICE TYPE IDENTIFIER				DEVICE ADDRESSES				SACK	INSTRUCTION OPCODE				DR AND WCR ADDRESSES				SACK	STOP
	0	1	0	1	A3	A2	A1	A0		1	1	0	1	R1	R0	P1	P0		

Write Wiper Counter Register (WCR) to Data Register (DR)

START	DEVICE TYPE IDENTIFIER				DEVICE ADDRESSES				ACK	INSTRUCTION OPCODE				DR AND WCR ADDRESSES				ACK	STOP	
	0	1	0	1	A3	A2	A1	A0		1	1	1	0	R1	R0	P1	P0			HIGH-VOLTAGE WRITE CYCLE

Increment/Decrement Wiper Counter Register (WCR)

START	DEVICE TYPE IDENTIFIER				DEVICE ADDRESSES				ACK	INSTRUCTION OPCODE				WCR ADDRESSES				ACK	INCREMENT/DECREMENT (SENT BY MASTER ON SDA)						STOP
	0	1	0	1	A3	A2	A1	A0		0	0	1	0	0	0	P1	P0		I/D	I/D	. . . .		I/D	I/D	

Global XFR Data Register (DR) to Wiper Counter Register (WCR)

START	DEVICE TYPE IDENTIFIER				DEVICE ADDRESSES				ACK	INSTRUCTION OPCODE				DR ADDRESSES				ACK	STOP
	0	1	0	1	A3	A2	A1	A0		0	0	0	1	R1	R0	0	0		

Global XFR Wiper Counter Register (WCR) to Data Register (DR)

START	DEVICE TYPE IDENTIFIER				DEVICE ADDRESSES				ACK	INSTRUCTION OPCODE				DR ADDRESSES				ACK	STOP	
	0	1	0	1	A3	A2	A1	A0		1	0	0	0	R1	R0	0	0			HIGH-VOLTAGE WRITE CYCLE

Symbol Table

WAVEFORM	INPUTS	OUTPUTS
	MUST BE STEADY	WILL BE STEADY
	MAY CHANGE FROM LOW TO HIGH	WILL CHANGE FROM LOW TO HIGH
	MAY CHANGE FROM HIGH TO LOW	WILL CHANGE FROM HIGH TO LOW
	DON'T CARE: CHANGES ALLOWED	CHANGING: STATE NOT KNOWN
	N/A	CENTER LINE IS HIGH IMPEDANCE

Guidelines for Calculating Typical Values of Bus Pull-Up Resistors

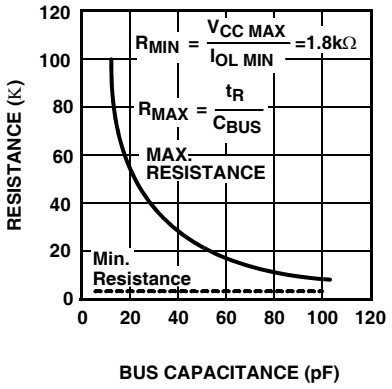

Absolute Maximum Ratings

Supply Voltage (V_{CC} Limits)
X9408 . . . . . 5V ±10%
X9408-2.7 . . . . . 2.7V to 5.5V
Voltage on SDA, SCL any address input
with respect to V_{SS}: . . . . . -1V to +7V
Voltage on V+ (Referenced to V_{SS}). 10V
Voltage on V- (Referenced to V_{SS}) . . . . . -10V
(V+) - (V-). 12V
I_W (10s) . . . . . ±6mA
Any VH/RH, VL/RL, VW/RW . . . . . V- to V+

Thermal Information

Temperature Under Bias . . . . . .-65°C to +135°C
Storage Temperature . . . . . .-65°C to +150°C
Pb-Free Reflow Profile. . . . . .see link below
http://www.intersil.com/pbfree/Pb-FreeReflow.asp

Operating Conditions

Temperature Range
Commercial . . . . . 0°C to +70°C
Industrial. . . . . .-40°C to +85°C

CAUTION: Do not operate at or near the maximum ratings listed for extended periods of time. Exposure to such conditions may adversely impact product reliability and result in failures not covered by warranty.

Analog Specifications (Over recommended operating conditions unless otherwise stated.)

SYMBOL	PARAMETER		TEST CONDITION	LIMITS MIN (Note 6)	TYP (Note 4)	MAX (Note 6)	UNIT
R_{TOTAL}	End to end resistance tolerance			-20		+20	%
	Power rating		+25°C, each pot			50	mW
R_W	Wiper resistance		$I_W = (V_H - V_L)/R_{TOTAL}$ @ V+, V- = ±3V		150	250	Ω
			$I_W = (V_H - V_L)/R_{TOTAL}$ @ V+, V- = ±5V		40	100	Ω
V_{V+}	Voltage on V+ pin	X9408		+4.5		+5.5	V
		X9408-2.7		+2.7		+5.5	
V_{V-}	Voltage on V- pin	X9408		-5.5		-4.5	V
		X9408-2.7		-5.5		-2.7	
V_{TERM}	Voltage on any V_H/R_H, V_L/R_L or V_W/R_W pin			V-		V+	V
	Noise		Ref: 1kHz		-120		dBV
	Resolution		(Note 4)		1.6		%
	Absolute linearity (Note 1)		$V(V_{wn}/R_{wn})_{(actual)}$ - $V(V_{wn}/R_{wn})_{(expected)}$ (Note 4)	-1		+1	MI (Note 3)
	Relative linearity (Note 2)		$V(V_{w(n+1)}/R_{w(n+1)})$ - $[V(V_{w(n)}/R_{w(n)}) + MI]$ (Note 4)	-0.2		+0.2	MI (Note 3)
	Temperature coefficient of R_{TOTAL}		(Note 4)		±300		ppm/°C
	Ratiometric Temperature Coefficient		(Note 4)		±20		ppm/°C
$C_H/C_L/C_W$	Potentiometer Capacitances		See Macro model		10/10/25		pF
I_{AL}	V_H/R_H, V_L/R_L, V_W/R_W Leakage Current		V_{IN} = V- to V+. Device is in Stand-by mode.		0.1	10	µA

DC Electrical Specifications (Over recommended operating conditions unless otherwise stated.)

SYMBOL	PARAMETER	TEST CONDITIONS	LIMITS			
			MIN (Note 6)	TYP (Note 4)	MAX (Note 6)	UNIT
I_{CC1}	V_{CC} supply current (nonvolatile write)	f_{SCL} = 400kHz, SDA = Open, Other Inputs = V_{SS}			5	mA
I_{CC2}	V_{CC} supply current (move wiper, write, read)	f_{SCL} = 400kHz, SDA = Open, Other Inputs = V_{SS}			250	µA
I_{SB}	V_{CC} current (standby)	SCL = SDA = V_{CC}, Addr. = V_{SS}			3	µA
I_{LI}	Input leakage current				10	µA
I_{LO}	Output leakage current				10	µA
V_{IH}	Input HIGH voltage		V_{CC} x 0.7		V_{CC} +0.5	V
V_{IL}	Input LOW voltage		–0.5		V_{CC} x 0.1	V
V_{OL}	Output LOW voltage	I_{OL} = 3mA			0.4	V

NOTES:

1. Absolute linearity is utilized to determine actual wiper voltage versus expected voltage as determined by wiper position when used as a potentiometer.
2. Relative linearity is utilized to determine the actual change in voltage between two successive tap positions when used as a potentiometer. It is a measure of the error in step size.
3. MI = RTOT/63 or [V(V_H/R_H) - V(V_L/R_L)]/63, single pot

ENDURANCE AND DATA RETENTION

PARAMETER	MIN	UNIT
Minimum endurance	100,000	Data changes per bit per register
Data retention	100	years

CAPACITANCE

SYMBOL	TEST	TEST CONDITION	TYP (Note 4)	UNIT
$C_{I/O}$ (Note 4)	Input/output capacitance (SDA)	$V_{I/O}$ = 0V	8	pF
C_{IN} (Note 4)	Input capacitance (A0, A1, A2, A3, and SCL)	V_{IN} = 0V	6	pF

POWER-UP TIMING

SYMBOL	PARAMETER	MIN (Note 6)	MAX (Note 6)	UNIT
t_{PUR} (Note 5)	Power-up to initiation of read operation		1	ms
t_{PUW} (Note 5)	Power-up to initiation of write operation		5	ms
$t_R V_{CC}$ (Note 6)	V_{CC} Power-up Ramp	0.2	50	V/msec

NOTES:

4. Limits should be considered typical and are not production tested.
5. t_{PUR} and t_{PUW} are the delays required from the time the third (last) power supply (V_{CC}, V+ or V-) is stable until the specific instruction can be issued
6. Parameters with MIN and/or MAX limits are 100% tested at +25°C, unless otherwise specified. Temperature limits established by characterization and are not production tested.

Power-up Requirements

(Power-up sequencing can affect correct recall of the wiper registers).

The preferred power-on sequence is as follows: First V-, then V_{CC} and V+, and then the potentiometer pins, V_H/R_H, V_L/R_L, and V_W/R_W. Voltage should not be applied to the potentiometer pins before V+ or V- is applied. The V_{CC} ramp rate specification should be met, and any glitches or slope changes in the V_{CC} line should be held to <100mV if possible. If V_{CC} powers down, it should be held below 0.1V for more than 1 second before powering up again in order for proper wiper register recall. Also, V_{CC} should not reverse polarity by more than 0.5V. Recall of wiper position will not be complete until V_{CC}, V+ and V- reach their final value.

A.C. Test Conditions

Input pulse levels	V_{CC} x 0.1 to V_{CC} x 0.9
Input rise and fall times	10ns
Input and output timing level	V_{CC} x 0.5

Equivalent A.C. Load Circuit

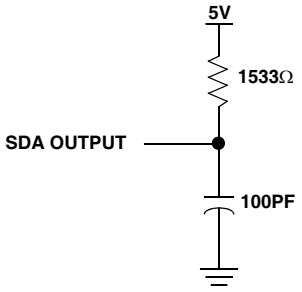

Circuit #3 SPICE Macro Model

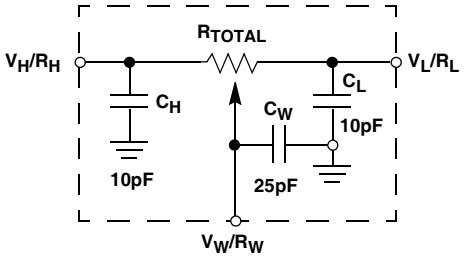

AC Timing (Over recommended operating condition)

SYMBOL	PARAMETER	MIN (Note 5)	MAX (Note 5)	UNIT
f_{SCL}	Clock frequency		400	kHz
t_{CYC}	Clock cycle time	2500		ns
t_{HIGH}	Clock high time	600		ns
t_{LOW}	Clock low time	1300		ns
$t_{SU:STA}$	Start setup time	600		ns
$t_{HD:STA}$	Start hold time	600		ns
$t_{SU:STO}$	Stop setup time	600		ns
$t_{SU:DAT}$	SDA data input setup time	100		ns
$t_{HD:DAT}$	SDA data input hold time	30		ns
t_{R} (Note 7)	SCL and SDA rise time		300	ns
t_{F} (Note 7)	SCL and SDA fall time		300	ns
t_{AA}	SCL low to SDA data output valid time		900	ns
t_{DH}	SDA Data output hold time	50		ns
T_{I}	Noise suppression time constant at SCL and SDA inputs	50		ns
t_{BUF}	Bus free time (prior to any transmission)	1300		ns
$t_{SU:WPA}$	$\overline{WP}$, A0, A1, A2 and A3 setup time	0		ns
$t_{HD:WPA}$	$\overline{WP}$, A0, A1, A2 and A3 hold time	0		ns

NOTES:

7. This parameter is not production tested. Parameter established by characterization.

HIGH-VOLTAGE WRITE CYCLE TIMING

SYMBOL	PARAMETER	TYP. (Note 4)	MAX. (Note 6)	UNIT
t_{WR}	High-voltage write cycle time (store instructions)	5	10	ms

XDCP TIMING

SYMBOL	PARAMETER	MIN. (Note 5)	MAX. (Note 6)	UNIT
t_{WRPO}	Wiper response time after the third (last) power supply is stable		10	µs
t_{WRL}	Wiper response time after instruction issued (all load instructions)		10	µs
t_{WRID}	Wiper response time from an active SCL/SCK edge (increment/decrement instruction)		10	µs

Timing Diagrams

Start and Stop Timing

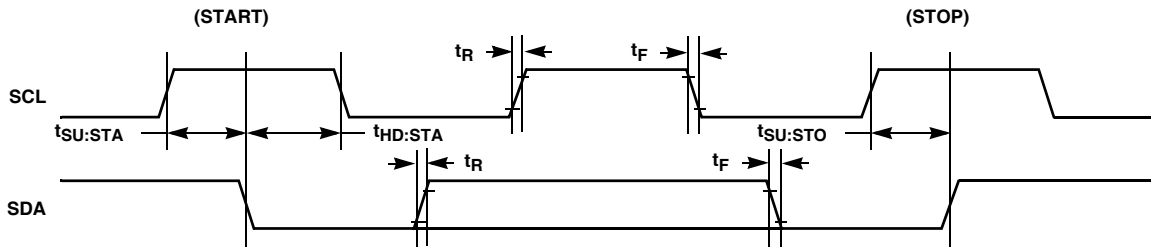

Input Timing

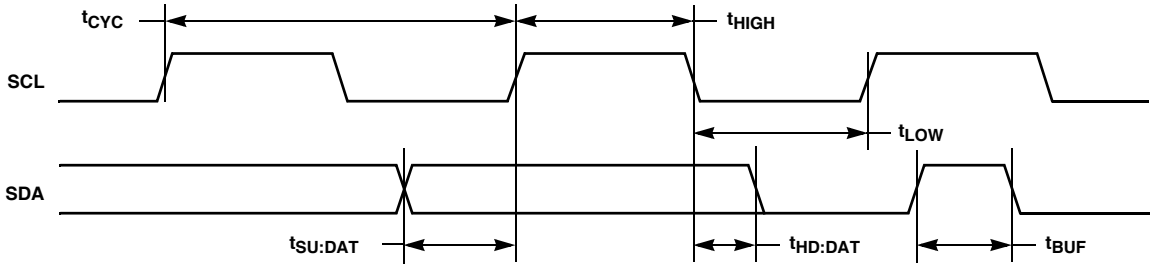

Output Timing

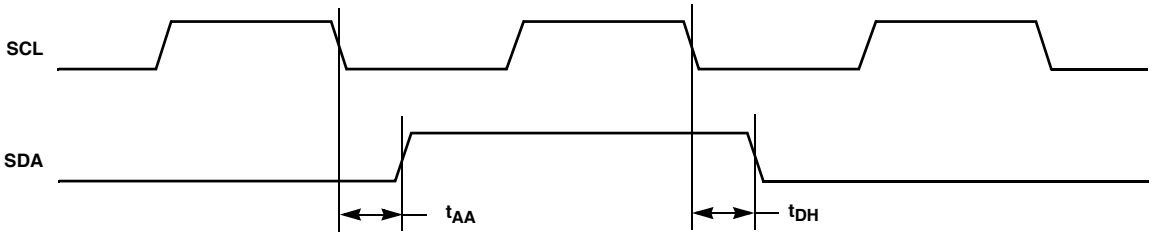

XDCP Timing (for All Load Instructions)

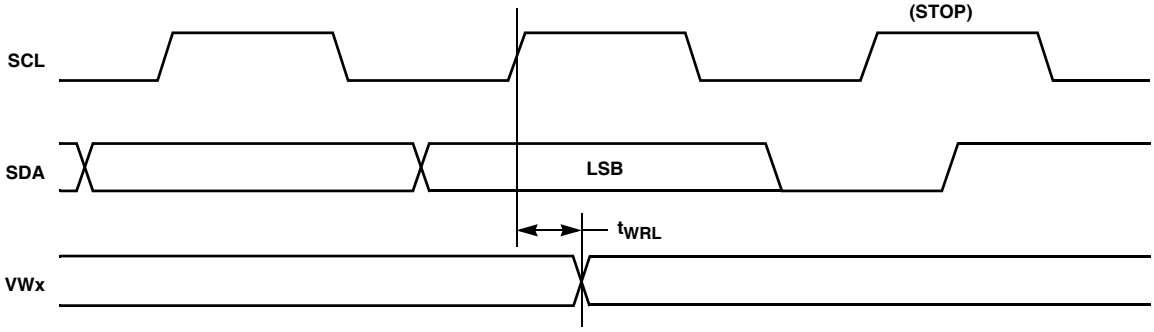

XDCP Timing (for Increment/Decrement Instruction)

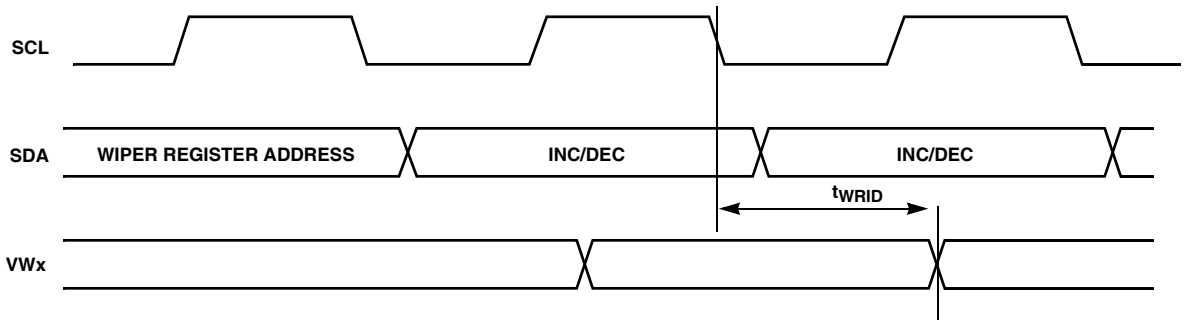

Write Protect and Device Address Pins Timing

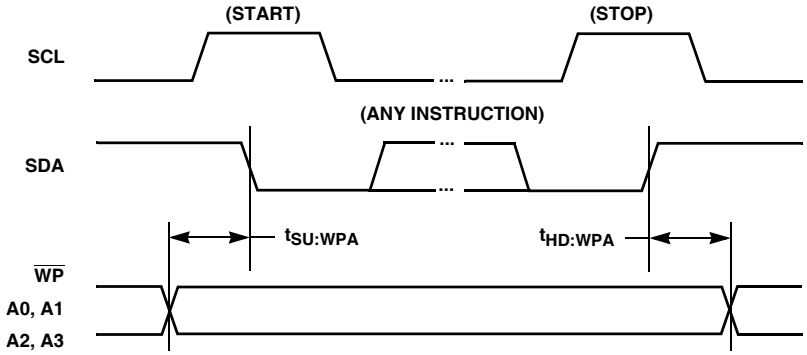

Applications information

Basic Configurations of Electronic Potentiometers

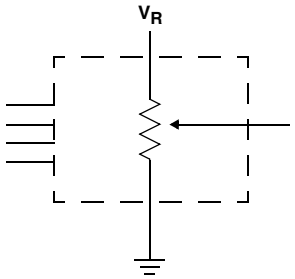

THREE TERMINAL POTENTIOMETER;
VARIABLE VOLTAGE DIVIDER

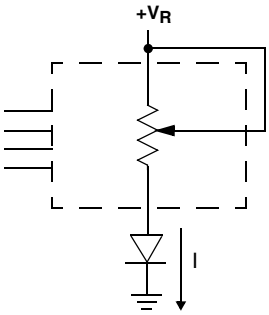

TWO TERMINAL VARIABLE RESISTOR;
VARIABLE CURRENT

Application Circuits

NONINVERTING AMPLIFIER

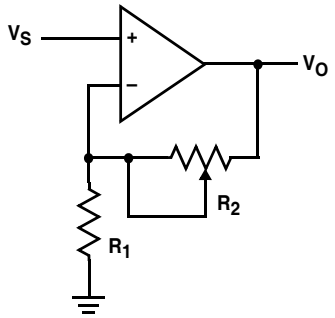

$V_O = (1+R_2/R_1)V_S$

VOLTAGE REGULATOR

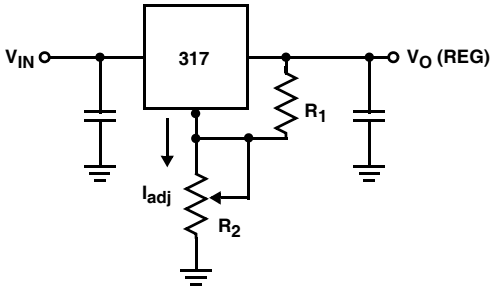

V_O (REG) = 1.25V $(1+R_2/R_1)+I_{adj}$ R_2

OFFSET VOLTAGE ADJUSTMENT

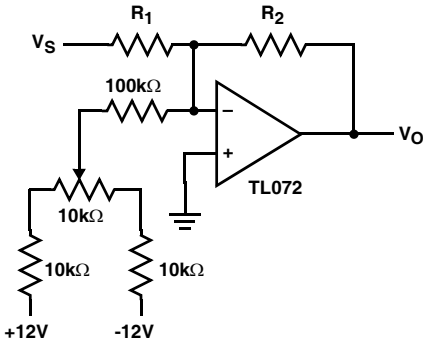

COMPARATOR WITH HYSTERESIS

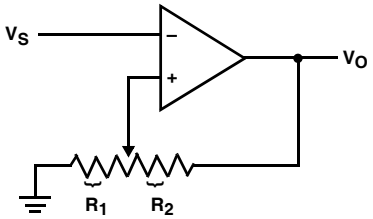

$V_{UL} = \{R_1/(R_1+R_2)\}\ V_O(max)$
$V_{LL} = \{R_1/(R_1+R_2)\}\ V_O(min)$

Application Circuits (continued)

ATTENUATOR

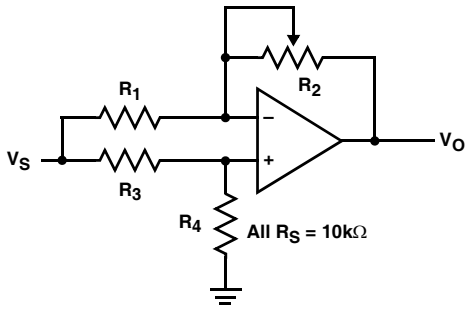

$V_O = G\ V_S$
$-1/2 \leq G \leq +1/2$

FILTER

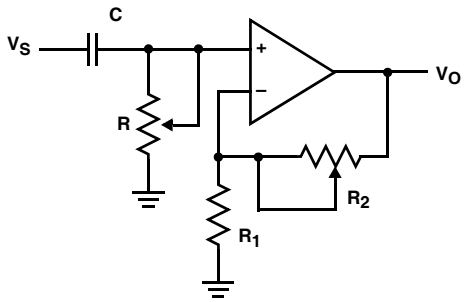

$G_O = 1 + R_2/R_1$
$fc = 1/(2\pi RC)$

INVERTING AMPLIFIER

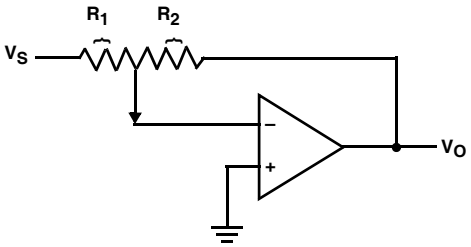

$V_O = G\ V_S$
$G = -R_2/R_1$

EQUIVALENT L-R CIRCUIT

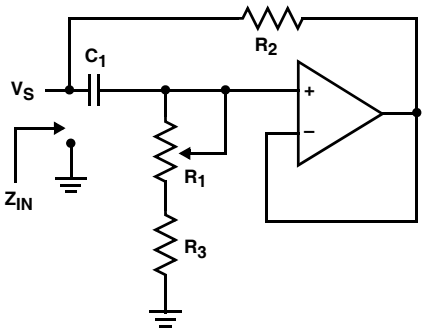

$Z_{IN} = R_2 + s\ R_2\ (R_1 + R_3)\ C_1 = R_2 + s\ Leq$
$(R_1 + R_3) >> R_2$

FUNCTION GENERATOR

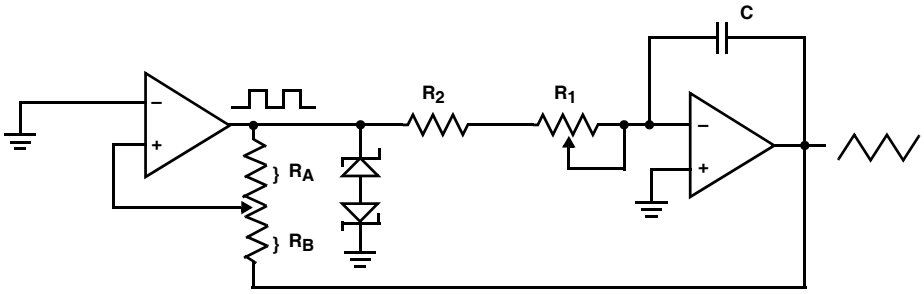

FREQUENCY μR_1, R_2, C
AMPLITUDE μR_A, R_B

Thin Shrink Small Outline Package Family (TSSOP)

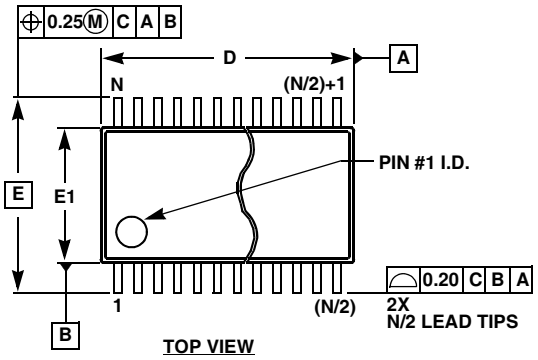

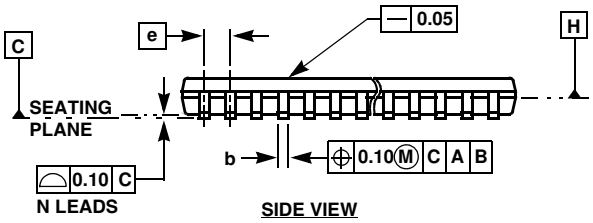

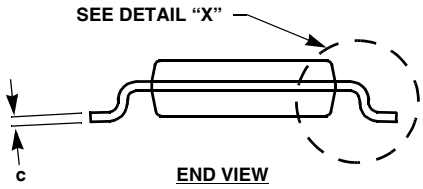

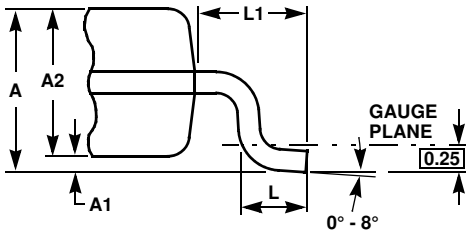

DETAIL X

MDP0044

THIN SHRINK SMALL OUTLINE PACKAGE FAMILY

SYMBOL	MILLIMETERS					TOLERANCE
	14 LD	16 LD	20 LD	24 LD	28 LD	
A	1.20	1.20	1.20	1.20	1.20	Max
A1	0.10	0.10	0.10	0.10	0.10	±0.05
A2	0.90	0.90	0.90	0.90	0.90	±0.05
b	0.25	0.25	0.25	0.25	0.25	+0.05/-0.06
c	0.15	0.15	0.15	0.15	0.15	+0.05/-0.06
D	5.00	5.00	6.50	7.80	9.70	±0.10
E	6.40	6.40	6.40	6.40	6.40	Basic
E1	4.40	4.40	4.40	4.40	4.40	±0.10
e	0.65	0.65	0.65	0.65	0.65	Basic
L	0.60	0.60	0.60	0.60	0.60	±0.15
L1	1.00	1.00	1.00	1.00	1.00	Reference

Rev. F 2/07

NOTES:

1. Dimension "D" does not include mold flash, protrusions or gate burrs. Mold flash, protrusions or gate burrs shall not exceed 0.15mm per side.
2. Dimension "E1" does not include interlead flash or protrusions. Interlead flash and protrusions shall not exceed 0.25mm per side.
3. Dimensions "D" and "E1" are measured at dAtum Plane H.
4. Dimensioning and tolerancing per ASME Y14.5M-1994.

Small Outline Plastic Packages (SOIC)

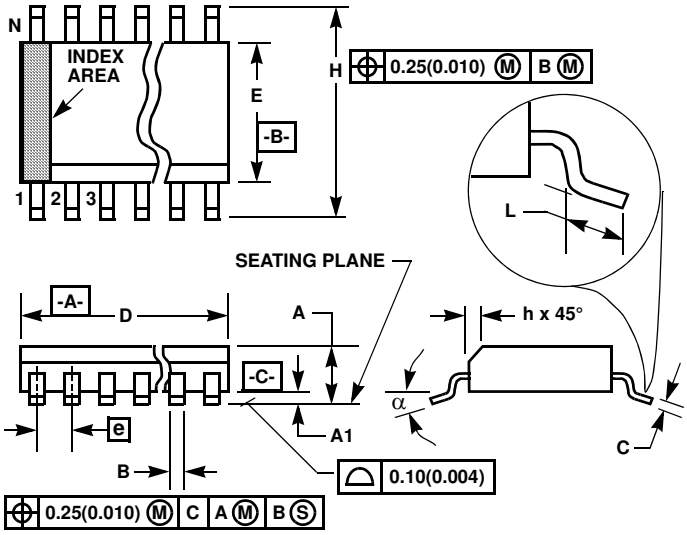

NOTES:

1. Symbols are defined in the “MO Series Symbol List” in Section 2.2 of Publication Number 95.
2. Dimensioning and tolerancing per ANSI Y14.5M-1982.
3. Dimension “D” does not include mold flash, protrusions or gate burrs. Mold flash, protrusion and gate burrs shall not exceed 0.15mm (0.006 inch) per side.
4. Dimension “E” does not include interlead flash or protrusions. Interlead flash and protrusions shall not exceed 0.25mm (0.010 inch) per side.
5. The chamfer on the body is optional. If it is not present, a visual index feature must be located within the crosshatched area.
6. “L” is the length of terminal for soldering to a substrate.
7. “N” is the number of terminal positions.
8. Terminal numbers are shown for reference only.
9. The lead width “B”, as measured 0.36mm (0.014 inch) or greater above the seating plane, shall not exceed a maximum value of 0.61mm (0.024 inch)
10. Controlling dimension: MILLIMETER. Converted inch dimensions are not necessarily exact.

M24.3 **(JEDEC MS-013-AD ISSUE C)**
24 LEAD WIDE BODY SMALL OUTLINE PLASTIC PACKAGE

SYMBOL	INCHES		MILLIMETERS		NOTES
	MIN	MAX	MIN	MAX	
A	0.0926	0.1043	2.35	2.65	-
A1	0.0040	0.0118	0.10	0.30	-
B	0.013	0.020	0.33	0.51	9
C	0.0091	0.0125	0.23	0.32	-
D	0.5985	0.6141	15.20	15.60	3
E	0.2914	0.2992	7.40	7.60	4
e	0.05 BSC		1.27 BSC		-
H	0.394	0.419	10.00	10.65	-
h	0.010	0.029	0.25	0.75	5
L	0.016	0.050	0.40	1.27	6
N	24		24		7
α	0°	8°	0°	8°	-

Rev. 1 4/06

All Intersil U.S. products are manufactured, assembled and tested utilizing ISO9000 quality systems.
Intersil Corporation’s quality certifications can be viewed at www.intersil.com/design/quality

Intersil products are sold by description only. Intersil Corporation reserves the right to make changes in circuit design, software and/or specifications at any time without notice. Accordingly, the reader is cautioned to verify that data sheets are current before placing orders. Information furnished by Intersil is believed to be accurate and reliable. However, no responsibility is assumed by Intersil or its subsidiaries for its use; nor for any infringements of patents or other rights of third parties which may result from its use. No license is granted by implication or otherwise under any patent or patent rights of Intersil or its subsidiaries.

For information regarding Intersil Corporation and its products, see www.intersil.com