THIS DRAWING IS UNPUBLISHED. RELEASED FOR PUBLICATION -.- .
© COPYRIGHT - BY TYCO ELECTRONICS CORPORATION. ALL RIGHTS RESERVED.

LOC	DIST
CM	00

REVISIONS

P	LTR	DESCRIPTION	DATE	DWN	APVD
	D	ECO-07-01856	12SEP07	KW	DB

1. MATERIAL: HEADER – POLYESTER UL94V-0 (BLACK)
   POST – COPPER ALLOY.
2. SOLDER SIDE OF P.C. BOARD SHOWN.
3. PARTS COMPLY WITH AMP SOLDERABILITY SPEC 109-11-2.
4. ONE HOLE MAY BE UNDERSIZED (.032-.035 DIA) FOR ASSEMBLY RETENTION DURING WAVE SOLDERING.
5. LATCH DETENT FEATURE OCCURS 2 PLACES ON EACH END (MAXIMUM OF FOUR PER PART). FOR 2 THRU 5 CIRCUIT HEADERS, LATCH FEATURE OCCURS BETWEEN EACH CIRCUIT.
6. COORDINATE DIMENSION APPLIES FROM CENTER OF ACTUAL FEATURE.
7. POST: 93/7 MATTE TIN-LEAD PLATING (-2 THRU -14) OR 100% MATTE TIN PLATING (-32 THRU -44).
8. POST MUST WITHSTAND 3.0 LBS (13.34 NEWTONS) MIN FORCE WITHOUT DISLODGING, EITHER DIRECTION.
9. TWO SIDES OF TAPER, AS SHOWN, MUST BE PLATED. TYPICAL, BOTH ENDS.
10. TWO SIDES OF TAPER, AS SHOWN, AND TIP MAY BE UNPLATED. TYPICAL, BOTH ENDS.
11. SLOTS MAY OR MAY NOT APPEAR ON THESE PARTS.

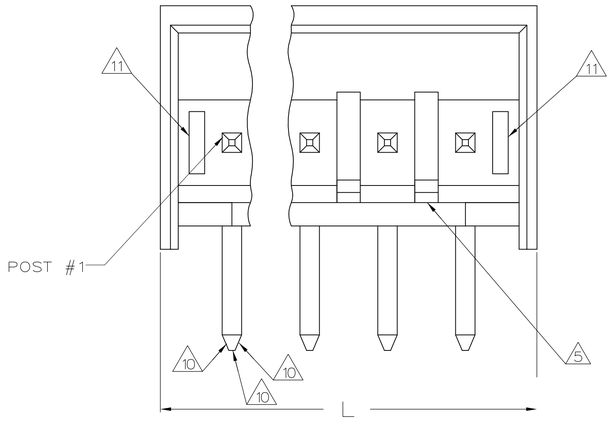

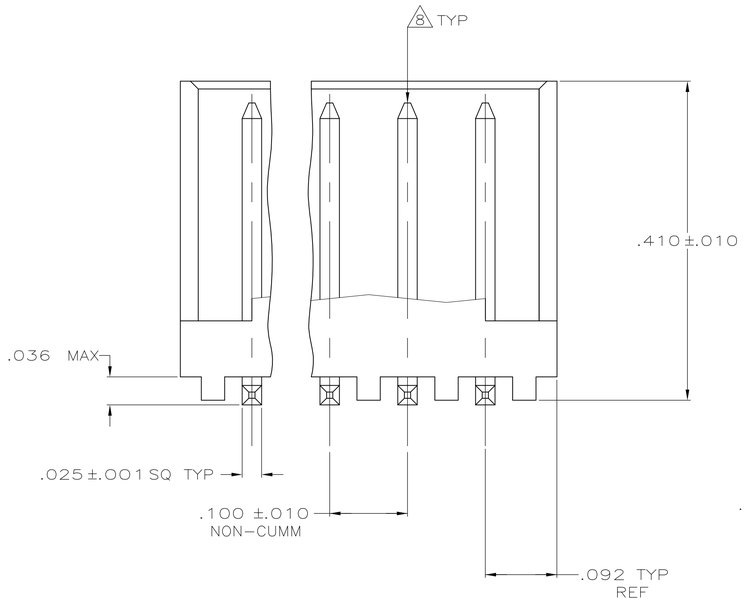

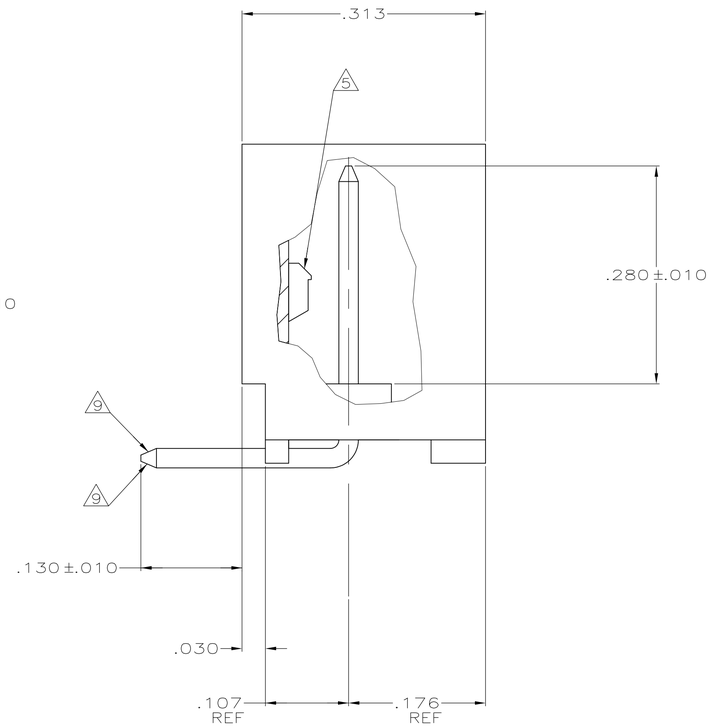

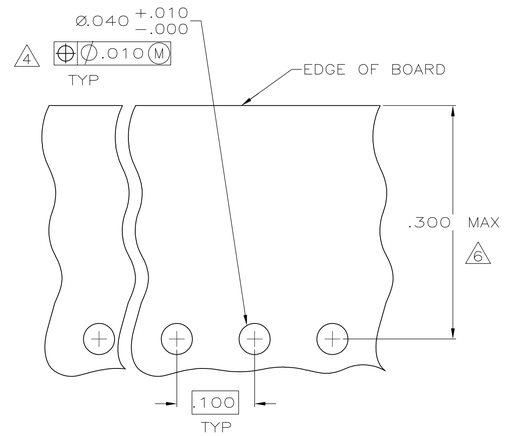

RECOMMENDED MOUNTING HOLE PATTERN 2
FOR .063 THK PRINTED CIRCUIT BOARD

IN	MM	NO OF POSITIONS	PART NUMBER
1.484	37.69	14	4-644894-4
1.384	35.15	13	4-644894-3
1.284	32.61	12	4-644894-2
1.184	30.07	11	4-644894-1
1.084	27.53	10	4-644894-0
.984	24.99	9	3-644894-9
.884	22.45	8	3-644894-8
.784	19.91	7	3-644894-7
.684	17.37	6	3-644894-6
.584	14.83	5	3-644894-5
.484	12.29	4	3-644894-4
.384	9.75	3	3-644894-3
.284	7.21	2	3-644894-2
1.484	37.69	14	1-644894-4
1.384	35.15	13	1-644894-3
1.284	32.61	12	1-644894-2
1.184	30.07	11	1-644894-1
1.084	27.53	10	1-644894-0
.984	24.99	9	644894-9
.884	22.45	8	644894-8
.784	19.91	7	644894-7
.684	17.37	6	644894-6
.584	14.83	5	644894-5
.484	12.29	4	644894-4
.384	9.75	3	644894-3
.284	7.21	2	644894-2
L		HEADER ASSEMBLY	

IN	MM	IN	MM	IN	MM
.030	0.76	.107	2.72	–	–
.025	0.64	.100	2.54	–	–
.010	0.25	.092	2.34	.410	10.41
.005	0.13	.063	1.60	.313	7.95
.001	0.03	.040	1.02	.300	7.62
.000350	0.00889	.036	0.91	.280	7.11
.000150	0.00381	.035	0.89	.176	4.47
.000	0.00	.032	0.81	.130	3.30

CONVERSION TABLE

METRIC

THIS DRAWING IS A CONTROLLED DOCUMENT.

DIMENSIONS: INCHES

TOLERANCES UNLESS OTHERWISE SPECIFIED:
0 PLC ± –
1 PLC ± –
2 PLC ± –
3 PLC ± .005
4 PLC ± –
ANGLES ± –

MATERIAL 1
FINISH 7

DWN K. WHITAKER 25JUNE2005
CHK D. BOSSI 25JUNE2005
APVD D. BOSSI 25JUNE2005
PRODUCT SPEC –
APPLICATION SPEC –
WEIGHT –

Tyco Electronics
Tyco Electronics Corporation
Harrisburg, Pa 17105-3608

NAME
CST-100 SHROUDED HEADER ASSEMBLY, FRICTION LOCK, RIGHT ANGLE POST, TIN OR TIN LEAD PLATED

SIZE A1 | CAGE CODE 00779 | DRAWING NO C-644894 | RESTRICTED TO –

CUSTOMER DRAWING | SCALE 10:1 | SHEET 1 OF 1 | REV D