PCMCIA COMPONENTS:
SINGLE DECK ASSEMBLY WITH THREADED INSERTS
IN HEADER HOLD-DOWNS

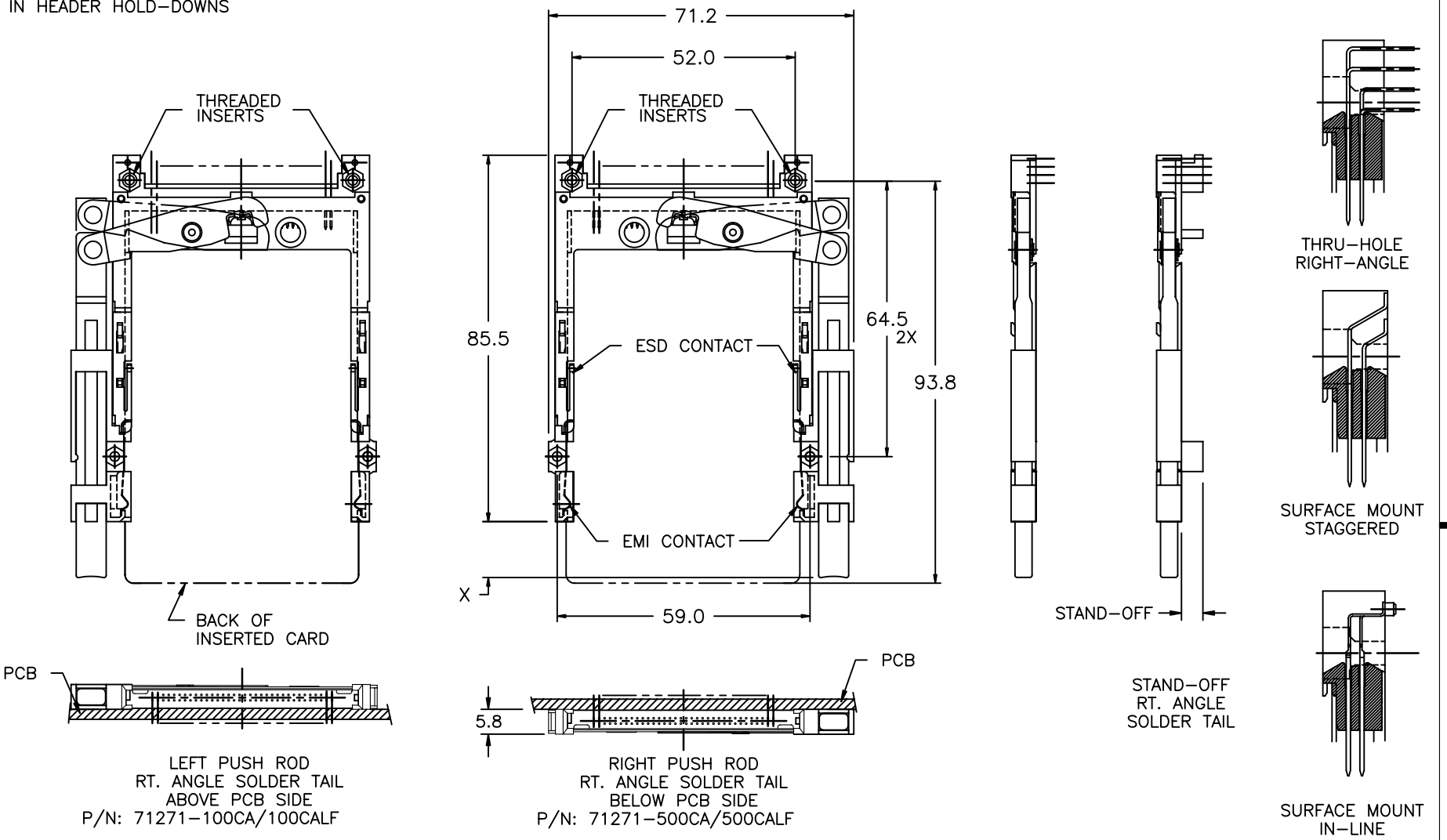

- REFER TO HEADER DRAWING 92856 AND EJECT MECHANISM 92192 FOR ADDITIONAL DIMENSIONS, MATERIAL, AND PLATING INFORMATION.
- REFER TO TA-946 FOR PCB LAYOUT AND PCB KEEP-OUT AREA.
- RECOMMENDED SCREW TORQUE: 1.0 TO 1.5 MAX in-lbs. (1.2-1.7 cm-kgs).

ltr	ecn no	dr	date
A	V51047	SAR	8/30/95
B	V60578	RHG	4/6/96
C	V12254	TFG	9/25/01
D	N05-0054	WB	03/01/05

sheet index	revision sheet	D	D
		1	2

mat'l. code

tolerances unless otherwise specified: .X±.3; linear .XX±.13; .XXX±.051; angles 0° ±2°

dr	S.ROYER	8/30/95
engr	D.BRANN	8/30/95
chr	D.BRANN	8/30/95
appd	D.BRANN	8/30/95

CUSTOMER COPY

projection

MM

scale 1:1

FCI Electronics www.fciconnect.com

title: 68 POS. EJECT HEADER ASSEMBLY WITH THREADED INSERTS

product family: MCS

size: A4 dwg no: 71271

code: –

sheet 1 of 3

cage code 92126

STATUS: Released

PDM: Rev:D

Printed: Oct 12, 2010

ACAD

Tous droits strictement reserves. Reproduction ou communication a des tiers interdite sous quelque forme que ce soit sans autorisation ecrite du propietaire. Propriete de c FCI. Droits de reproduction FCI.

All rights strictly reserved. Reproduction or issue to third parties in any form whatever is not permitted without written authority from the proprietor. Property of FCI. Copyright FCI.

PCMCIA COMPONENTS:
SINGLE DECK ASSEMBLY WITH THREADED INSERTS
IN HEADER HOLD-DOWNS

PCB SIDE ①	PUSH ROD LOCATION ①	SOLDER TAIL ②	STANDOFF (MM)	HEADER PART NUMBER 92856-												AND MECHANISM P/N 92192- ③ 4								TO MAKE FINAL ASSY PART NUMBER NOTE ④
				000	001	002	010	020	040	500	501	502	510	520	540	00XY	02XY	04XY	05XY	10XY	12XY	14XY	15XY	
ABOVE	RIGHT	R/A	NONE	■												■								71271 -000XY
ABOVE	LEFT	R/A	NONE	■																■				71271 -100XY
BELOW	RIGHT	R/A	NONE							■										■				71271 -500XY
BELOW	LEFT	R/A	NONE							■						■								71271 -600XY
ABOVE	RIGHT	R/A	2						■								■							71271 -020XY
ABOVE	LEFT	R/A	2						■												■			71271 -120XY
BELOW	RIGHT	R/A	2												■						■			71271 -520XY
BELOW	LEFT	R/A	2												■		■							71271 -620XY
ABOVE	RIGHT	R/A	4				■											■						71271 -040XY
ABOVE	LEFT	R/A	4				■															■		71271 -140XY
BELOW	RIGHT	R/A	4										■									■		71271 -540XY
BELOW	LEFT	R/A	4										■					■						71271 -640XY
ABOVE	RIGHT	R/A	5					■											■					71271 -050XY
ABOVE	LEFT	R/A	5					■															■	71271 -150XY
BELOW	RIGHT	R/A	5											■									■	71271 -550XY
BELOW	LEFT	R/A	5											■					■					71271 -650XY
ABOVE	RIGHT	SMT-IL	NONE			■										■								71271 -002XY
ABOVE	LEFT	SMT-IL	NONE			■														■				71271 -102XY
BELOW	RIGHT	SMT-IL	NONE									■								■				71271 -502XY
BELOW	LEFT	SMT-IL	NONE									■				■								71271 -602XY
ABOVE	RIGHT	SMT-STG	NONE		■											■								71271 -001XY
ABOVE	LEFT	SMT-STG	NONE		■															■				71271 -101XY
BELOW	RIGHT	SMT-STG	NONE								■									■				71271 -501XY
BELOW	LEFT	SMT-STG	NONE								■					■								71271 -601XY

NOTES:

① PCB SIDE AND PUSHROD LOCATION ARE AS APPEARS INSTALLED.

② SOLDER TAIL KEY:
R/A = RIGHT ANGLE PIN-THROUGH-HOLE
SMT-STG = STAGGERED SURFACE MOUNT
SMT-IL = SURFACE MOUNT IN-LINE (SINGLE ROW)

③ X = PUSHROD LENGTH FROM END OF GUIDE RAIL WHEN CARD INSERTED = C = 13.0mm (LENGTH CURRENTLY TOOLED)
Y = PUSHROD COLOR = A = BLACK (COLOR CURRENTLY AVAILABLE)
X AND Y DESIGNATE THE PUSHROD. THEY MUST BE THE SAME LETTER IN THE EJECT MECHANISM AND ASSEMBLY PART NUMBERS.
HERE IS AN EXAMPLE:
MECHANISM 92192-00CA IS USED IN
ASSEMBLY 71271-000CA

④ ADD "H" TO PART NUMBER FOR OPTIONAL HOLD DOWN (2 PER ASSEMBLY IN EJECT MECHANISM).

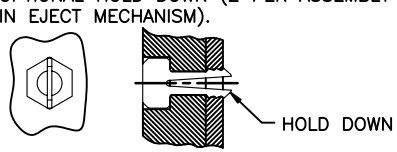

5 PACKAGING SPECIFICATION: GS-14-341

mat'l. code				tolerances unless otherwise specified			CUSTOMER COPY	FCI Electronics www.fciconnect.com
ltr	ecn no	dr	date	linear	.X±.3			
D					.XX±.13		projection	title 68 POS EJECT HEADER ASSEMBLY WITH THREADED INSERTS
					.XXX±.051			
				angles	0° ±2°			
				dr	S.ROYER	8/30/95	MM	product family MCS / code –
				engr	D.BRANN	8/30/95		
				chr	D.BRANN	8/30/95	scale 1:1	size A4 / dwg no 71271 / sheet 2 of
				appd	D.BRANN	8/30/95		
sheet index	revision sheet							cage code 32526

Tous droits strictement reserves. Reproduction ou communication a des tiers interdite sous quelque forme que ce soit sans autorisation ecrite du propietaire. Propriete de c FCI. Droits de reproduction FCI.

All rights strictly reserved. Reproduction or issue to third parties in any form whatever is not permitted without written authority from the proprietor. Property of FCI. Copyright FCI.

PCMCIA COMPONENTS:
SINGLE DECK ASSEMBLY WITH THREADED INSERTS
IN HEADER HOLD-DOWNS

PCB SIDE ①	PUSH ROD LOCATION ①	SOLDER TAIL ②	STANDOFF (MM)	HEADER PART NUMBER 92856-***LF												AND MECHANISM P/N 92192- ③ 4								TO MAKE FINAL ASSY PART NUMBER NOTE ④
				000	001	002	010	020	040	500	501	502	510	520	540	00XY	02XY	04XY	05XY	10XY	12XY	14XY	15XY	
ABOVE	RIGHT	R/A	NONE	■												■								71271-000XYLF
ABOVE	LEFT	R/A	NONE	■																■				71271-100XYLF
BELOW	RIGHT	R/A	NONE							■										■				71271-500XYLF
BELOW	LEFT	R/A	NONE							■						■								71271-600XYLF
ABOVE	RIGHT	R/A	2						■								■							71271-020XYLF
ABOVE	LEFT	R/A	2						■												■			71271-120XYLF
BELOW	RIGHT	R/A	2												■						■			71271-520XYLF
BELOW	LEFT	R/A	2												■		■							71271-620XYLF
ABOVE	RIGHT	R/A	4				■											■						71271-040XYLF
ABOVE	LEFT	R/A	4				■															■		71271-140XYLF
BELOW	RIGHT	R/A	4										■									■		71271-540XYLF
BELOW	LEFT	R/A	4										■					■						71271-640XYLF
ABOVE	RIGHT	R/A	5					■											■					71271-050XYLF
ABOVE	LEFT	R/A	5					■															■	71271-150XYLF
BELOW	RIGHT	R/A	5											■									■	71271-550XYLF
BELOW	LEFT	R/A	5											■					■					71271-650XYLF
ABOVE	RIGHT	SMT-IL	NONE			■										■								71271-002XYLF
ABOVE	LEFT	SMT-IL	NONE			■														■				71271-102XYLF
BELOW	RIGHT	SMT-IL	NONE									■								■				71271-502XYLF
BELOW	LEFT	SMT-IL	NONE									■				■								71271-602XYLF
ABOVE	RIGHT	SMT-STG	NONE		■											■								71271-001XYLF
ABOVE	LEFT	SMT-STG	NONE		■															■				71271-101XYLF
BELOW	RIGHT	SMT-STG	NONE								■									■				71271-501XYLF
BELOW	LEFT	SMT-STG	NONE								■					■								71271-601XYLF

NOTES:

1. PCB SIDE AND PUSHROD LOCATION ARE AS APPEARS INSTALLED.
2. SOLDER TAIL KEY:
   R/A = RIGHT ANGLE PIN-THROUGH-HOLE
   SMT-STG = STAGGERED SURFACE MOUNT
   SMT-IL = SURFACE MOUNT IN-LINE (SINGLE ROW)
3. X = PUSHROD LENGTH FROM END OF GUIDE RAIL WHEN CARD INSERTED = C = 13.0mm (LENGTH CURRENTLY TOOLED)
   Y = PUSHROD COLOR = A = BLACK (COLOR CURRENTLY AVAILABLE)
   X AND Y DESIGNATE THE PUSHROD. THEY MUST BE THE SAME LETTER IN THE EJECT MECHANISM AND ASSEMBLY PART NUMBERS.
   HERE IS AN EXAMPLE:
   MECHANISM 92192-00CA IS USED IN
   ASSEMBLY 71271-000CALF
4. IF LEAD FREE P.N.THE HOUSING WILL WITHSTAND EXPOSURE TO 260°C PEAK TEMPERATURE FOR 10 SECONDS IN A WAVE SOLDER APPLICATION WITH A 1.00MM MINIMUM THICK CIRCUIT BOARD.
5. IF LEAD FREE P/N.THE PRODUCT MEETS EUROPEAN UNION DIRECTIVES AND OTHER COUNTRY REGULATIONS AS DISCRIBLED IN GS-22-008
6. LEAD FREE P/N PACKAGING MEETS GS-14-920 SPECIFICATION
7. ADD "H" TO PART NUMBER FOR OPTIONAL HOLD DOWN (2 PER ASSEMBLY IN EJECT MECHANISM).

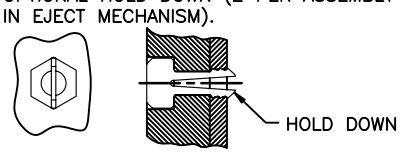

8. PACKAGING SPECIFICATION: GS-14-341

mat'l. code				tolerances unless otherwise specified			CUSTOMER COPY	FCI Electronics www.fciconnect.com
ltr	ecn no	dr	date	linear	.X±.3		projection	title 68 POS EJECT HEADER ASSEMBLY WITH THREADED INSERTS
D					.XX±.13			
					.XXX±.051			
				angles	0° ±2°			
				dr	S.ROYER	8/30/95	MM	product family MCS / code –
				engr	D.BRANN	8/30/95		
				chr	D.BRANN	8/30/95	scale 1:1	size A4 / dwg no 71271 / sheet 3 of
				appd	D.BRANN	8/30/95		
sheet index	revision sheet							cage code 32526

Tous droits strictement reserves. Reproduction ou communication a des tiers interdite sous quelque forme que ce soit sans autorisation ecrite du proprietaire. Propriete de c FCI. Droits de reproduction FCI.

All rights strictly reserved. Reproduction or issue to third parties in any form whatever is not permitted without written authority from the proprietor. Property of FCI. Copyright FCI.