used for: D-SUB COMBINATION

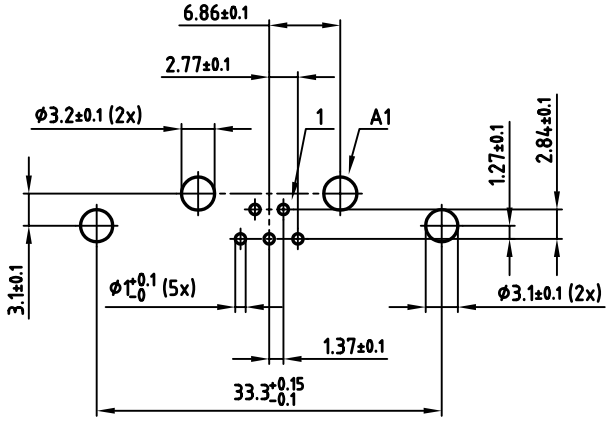

P.C.B. HOLE DRILLINGS

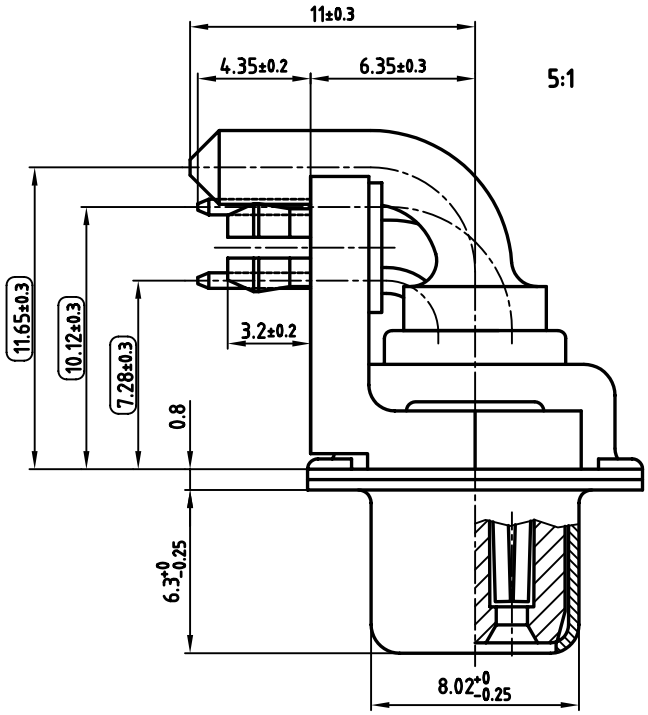

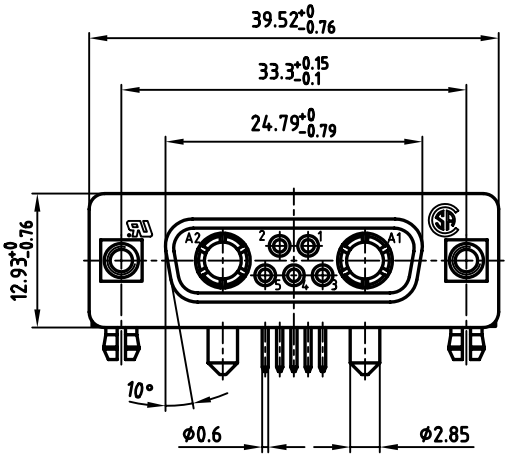

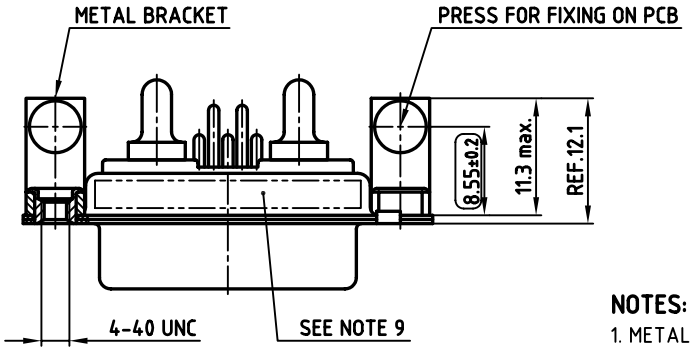

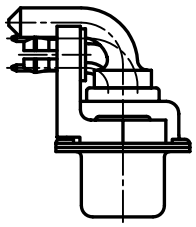

NOTES:

1. METALSHELLS: STEEL; min. 320µ" TIN
2. INSULATORS: PBT GF UL 94 V-0, GREEN
3. SIGNAL CONTACTS: COPPER ALLOY
   PLATING: 30µ" HARD GOLD OVER min. 50µ" NICKEL
4. HIGH POWER CONTACTS 20A: COPPER ALLOY
   PLATING: 30µ" HARD GOLD OVER min. 50µ" NICKEL
5. METAL BRACKET: STEEL; min. 320µ" TIN over 80µ" NICKEL
6. THREADED INSERT: COPPER ALLOY; min. 200µ" TIN over 80µ" NICKEL
7. PCB-SNAP: COPPER ALLOY; min. 200µ" TIN over 80µ" NICKEL
   PCB-HOLE: Φ3.1±0.1; PCB THICKNESS 1.6mm
8. MAXIMUM TORQUE VALUE FOR THREAD: 6" LBS
9. CONNECTOR IS PART MARKED: 3007W2SCT56N40X CONEC ABC
10. ( ) = CHECK DIMENSION

Directive 2002/95/EC „RoHS" Compliant

APPROVAL # FREIGABE # DEBLOCAGE # AUTORIZACION # APPROVAL

CUSTOMER APPROVAL DATE:

NAME: TITLE:

COMPANY NAME:

APPROVAL # FREIGABE # DEBLOCAGE # AUTORIZACION # APPROVAL

THIS DRAWING MAY NOT BE COPIED OR REPRODUCED IN ANY WAY, AND MAY NOT BE PASSED ON TO A THIRD PARTY WITHOUT WRITTEN PERMISSION. OWNERSHIP AND COPYRIGHT OF CONEC GmbH

DO NOT ALTER CAD DRAWING BY HAND

rev.	description	date	name

tolerance

dim. in mm

	date	name
2004		
drawn	05.11.	Lehmenkühler
appd.	05.11.	Mickenbecker
norm		
d-old		

CONEC®

scale: 2:1 (5:1)

material: SEE NOTES

title:

D-SUB COMBINATION FEMALE 90°

7W2S

with threaded insert, metal bracket and clip

dwg no: 13K2A1141

AutoCAD 2004 | DIN-A 3 | sh: 1/1

part no: 3007W2SCT56N40X