User's Manual

Application Example for Cloud Connectivity (AE-CLOUD2)

User's Manual

Renesas Synergy™ Platform
Synergy Tools & Kits
Tools: Connectivity

All information contained in these materials, including products and product specifications, represents information on the product at the time of publication and is subject to change by Renesas Electronics Corp. without notice. Please review the latest information published by Renesas Electronics Corp. through various means, including the Renesas Electronics Corp. website (http://www.renesas.com).

Renesas Electronics
www.renesas.com

Rev.1.00 Sep 2018

Notice

1. Descriptions of circuits, software and other related information in this document are provided only to illustrate the operation of semiconductor products and application examples. You are fully responsible for the incorporation or any other use of the circuits, software, and information in the design of your product or system. Renesas Electronics disclaims any and all liability for any losses and damages incurred by you or third parties arising from the use of these circuits, software, or information.
2. Renesas Electronics hereby expressly disclaims any warranties against and liability for infringement or any other claims involving patents, copyrights, or other intellectual property rights of third parties, by or arising from the use of Renesas Electronics products or technical information described in this document, including but not limited to, the product data, drawings, charts, programs, algorithms, and application examples.
3. No license, express, implied or otherwise, is granted hereby under any patents, copyrights or other intellectual property rights of Renesas Electronics or others.
4. You shall not alter, modify, copy, or reverse engineer any Renesas Electronics product, whether in whole or in part. Renesas Electronics disclaims any and all liability for any losses or damages incurred by you or third parties arising from such alteration, modification, copying or reverse engineering.
5. Renesas Electronics products are classified according to the following two quality grades: "Standard" and "High Quality". The intended applications for each Renesas Electronics product depends on the product's quality grade, as indicated below.

   "Standard": Computers; office equipment; communications equipment; test and measurement equipment; audio and visual equipment; home electronic appliances; machine tools; personal electronic equipment; industrial robots; etc.

   "High Quality": Transportation equipment (automobiles, trains, ships, etc.); traffic control (traffic lights); large-scale communication equipment; key financial terminal systems; safety control equipment; etc.

   Unless expressly designated as a high reliability product or a product for harsh environments in a Renesas Electronics data sheet or other Renesas Electronics document, Renesas Electronics products are not intended or authorized for use in products or systems that may pose a direct threat to human life or bodily injury (artificial life support devices or systems; surgical implantations; etc.), or may cause serious property damage (space system; undersea repeaters; nuclear power control systems; aircraft control systems; key plant systems; military equipment; etc.). Renesas Electronics disclaims any and all liability for any damages or losses incurred by you or any third parties arising from the use of any Renesas Electronics product that is inconsistent with any Renesas Electronics data sheet, user's manual or other Renesas Electronics document.
6. When using Renesas Electronics products, refer to the latest product information (data sheets, user's manuals, application notes, "General Notes for Handling and Using Semiconductor Devices" in the reliability handbook, etc.), and ensure that usage conditions are within the ranges specified by Renesas Electronics with respect to maximum ratings, operating power supply voltage range, heat dissipation characteristics, installation, etc. Renesas Electronics disclaims any and all liability for any malfunctions, failure or accident arising out of the use of Renesas Electronics products outside of such specified ranges.
7. Although Renesas Electronics endeavors to improve the quality and reliability of Renesas Electronics products, semiconductor products have specific characteristics, such as the occurrence of failure at a certain rate and malfunctions under certain use conditions. Unless designated as a high reliability product or a product for harsh environments in a Renesas Electronics data sheet or other Renesas Electronics document, Renesas Electronics products are not subject to radiation resistance design. You are responsible for implementing safety measures to guard against the possibility of bodily injury, injury or damage caused by fire, and/or danger to the public in the event of a failure or malfunction of Renesas Electronics products, such as safety design for hardware and software, including but not limited to redundancy, fire control and malfunction prevention, appropriate treatment for aging degradation or any other appropriate measures. Because the evaluation of microcomputer software alone is very difficult and impractical, you are responsible for evaluating the safety of the final products or systems manufactured by you.
8. Please contact a Renesas Electronics sales office for details as to environmental matters such as the environmental compatibility of each Renesas Electronics product. You are responsible for carefully and sufficiently investigating applicable laws and regulations that regulate the inclusion or use of controlled substances, including without limitation, the EU RoHS Directive, and using Renesas Electronics products in compliance with all these applicable laws and regulations. Renesas Electronics disclaims any and all liability for damages or losses occurring as a result of your noncompliance with applicable laws and regulations.
9. Renesas Electronics products and technologies shall not be used for or incorporated into any products or systems whose manufacture, use, or sale is prohibited under any applicable domestic or foreign laws or regulations. You shall comply with any applicable export control laws and regulations promulgated and administered by the governments of any countries asserting jurisdiction over the parties or transactions.
10. It is the responsibility of the buyer or distributor of Renesas Electronics products, or any other party who distributes, disposes of, or otherwise sells or transfers the product to a third party, to notify such third party in advance of the contents and conditions set forth in this document.
11. This document shall not be reprinted, reproduced or duplicated in any form, in whole or in part, without prior written consent of Renesas Electronics.
12. Please contact a Renesas Electronics sales office if you have any questions regarding the information contained in this document or Renesas Electronics products.

(Note 1) "Renesas Electronics" as used in this document means Renesas Electronics Corporation and also includes its directly or indirectly controlled subsidiaries.

(Note 2) "Renesas Electronics product(s)" means any product developed or manufactured by or for Renesas Electronics.

(Rev.4.0-1 November 2017)

Renesas Synergy™ Application Example for Cloud Connectivity (AE-CLOUD2) Disclaimer

By using this AE-CLOUD2, the user accepts the following terms, which are in addition to, and control in the event of disagreement, with Renesas' General Terms and Conditions available at https://www.renesas.com/en-us/legal/disclaimer.html.

The AE-CLOUD2 is not guaranteed to be error free, and the entire risk as to the results and performance of the AE-CLOUD2 is assumed by the User. The AE-CLOUD2 is provided by Renesas on an "as is" basis without warranty of any kind whether express or implied, including but not limited to the implied warranties of satisfactory quality, fitness for a particular purpose, title, and non-infringement of intellectual property rights with regard to the AE-CLOUD2. Renesas expressly disclaims all such warranties.

Renesas does not consider the AE-CLOUD2 a finished product and therefore the AE-CLOUD2 may not yet comply with some requirements applicable to finished products, including, but not limited to recycling (WEEE), CE, UL, restricted substances (ROHS), FCC, FEE, and electromagnetic compatibility regulations. Renesas or its affiliates shall in no event be liable for any loss of profit, loss of data, loss of contract, loss of business, damage to reputation or goodwill, any economic loss, any reprogramming or recall costs (whether the foregoing losses are direct or indirect) nor shall Renesas or its affiliates be liable for any other direct or indirect special, incidental or consequential damages arising out of or in relation to the use of this AE-CLOUD2, even if Renesas or its affiliates have been advised of the possibility of such damages.

Renesas has used reasonable care in preparing the information included in this document, but Renesas does not warrant that such information is error free nor does Renesas guarantee an exact match for every application or parameter to part numbers designated by other vendors listed herein. The information provided in this document is intended solely to enable the use of Renesas products. No express or implied license to any intellectual property right is granted by this document or in connection with the sale of Renesas products. Renesas reserves the right to make changes to specifications and product descriptions at any time without notice. Renesas assumes no liability for any damages incurred by you resulting from errors in or omissions from the information included herein. Renesas cannot verify, and assumes no liability for, the accuracy of information available on another company's website.

Precautions

This Renesas Synergy™ Kit is only intended for use in a laboratory environment under ambient temperature and humidity conditions. A safe separation distance should be used between this and any sensitive equipment. Its use outside the laboratory, classroom, study area, or similar such area invalidates conformity with the protection requirements of the Electromagnetic Compatibility Directive and could lead to prosecution.

The product generates, uses, and can radiate radio frequency energy and may cause harmful interference to radio communications. There is no guarantee that interference will not occur in a particular installation. If this equipment causes harmful interference to radio or television reception, which can be determined by turning the equipment off or on, you are encouraged to try to correct the interference by one or more of the following measures:

• Ensure attached cables do not lie across the equipment.

• Reorient the receiving antenna.

• Increase the distance between the equipment and the receiver.

• Connect the equipment into an outlet on a circuit different from that which the receiver is connected.

• Power down the equipment when not in use.

• Consult the dealer or an experienced radio/TV technician for help.

Note: It is recommended that wherever possible shielded interface cables are used.

The product is potentially susceptible to certain EMC phenomena. To mitigate against them it is recommended that the following measures be undertaken:

• The user is advised that mobile phones should not be used within 10 m of the product when in use.

• The user is advised to take ESD precautions when handling the equipment.

The Renesas Synergy™ Kit does not represent an ideal reference design for an end product and does not fulfill the regulatory standards for an end product.

1. Overview

The AE-CLOUD2 is an Application Example Kit for Cloud connectivity, intended for fast prototyping of embedded systems, specifically targeting Internet of Things applications. The kit includes all components required for development and debugging of software that can collect information from a variety of sensors and communicate it securely to the Cloud.

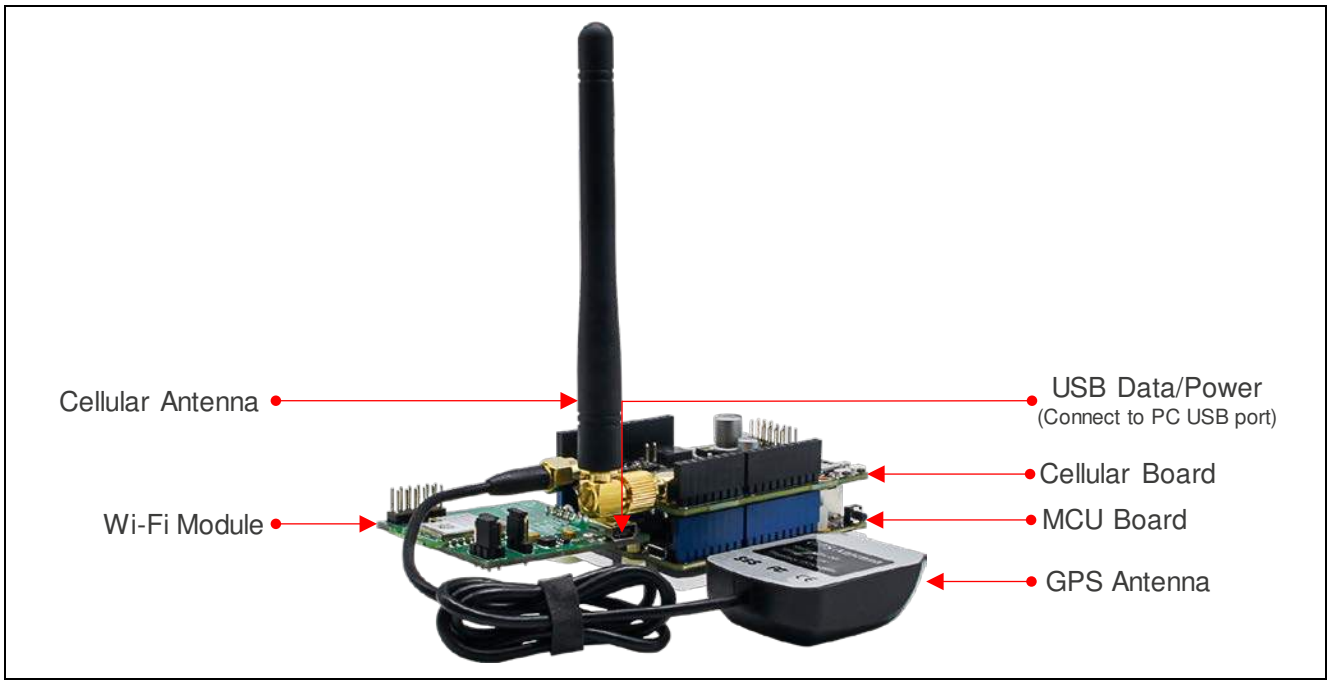

Figure 1 Cloud Connectivity Application Example Kit

The kit includes a Wi-Fi board based on the GT202 module that uses Qualcomm® QCA4002 system on a chip. The board supports 802.11 b/g/n communication standards.

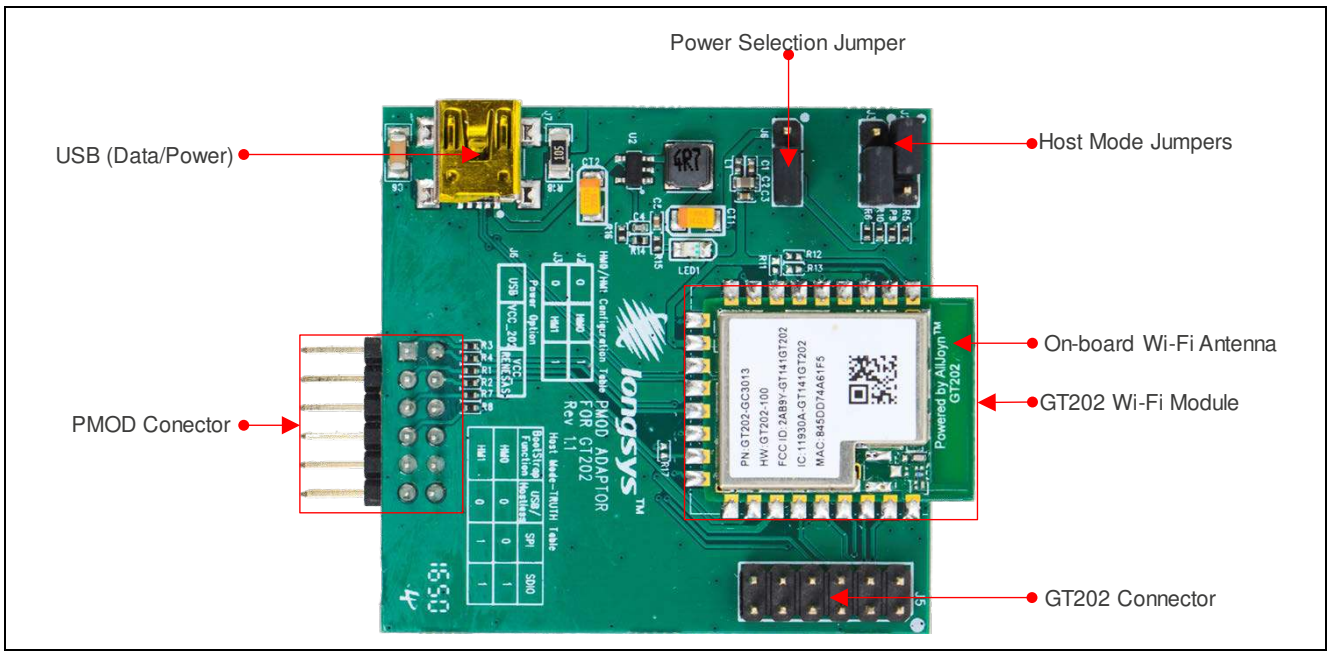

Figure 2 Wi-Fi Board based on the GT202 Module

The kit also includes a cellular connectivity shield based on the Quectel BG96 module. It provides 4G/LTE Cat-M1 (eMTC) and 4G/LTE Cat-NB1 (NB-IoT) support with fallback to 2G/EGPRS mobile networks. In addition, it integrates a GPS receiver which enables the development of position-tracking applications.

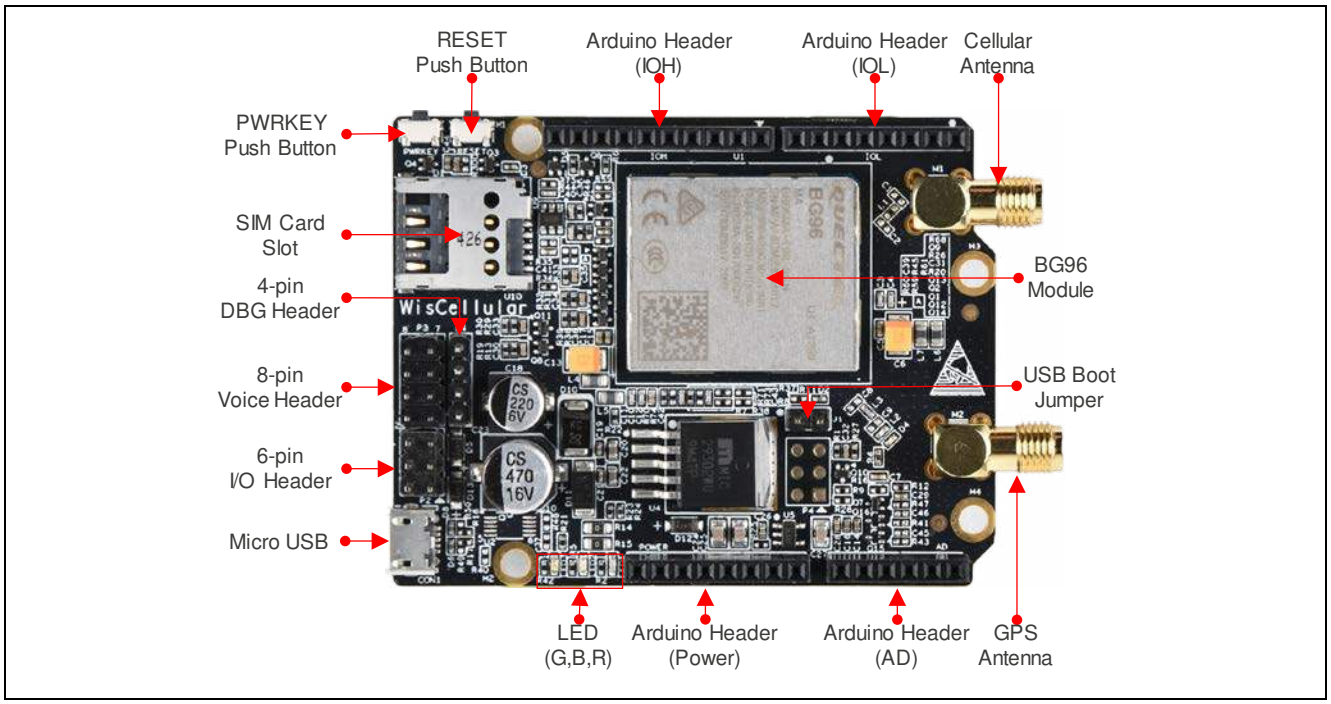

Figure 3 Arduino Shield for Cellular Network Connectivity

At the heart of the kit is the MCU board based on the Renesas Synergy™ S5D9 Microcontroller. Figure 4 describes the main board components, the interface connectors, and their purpose.

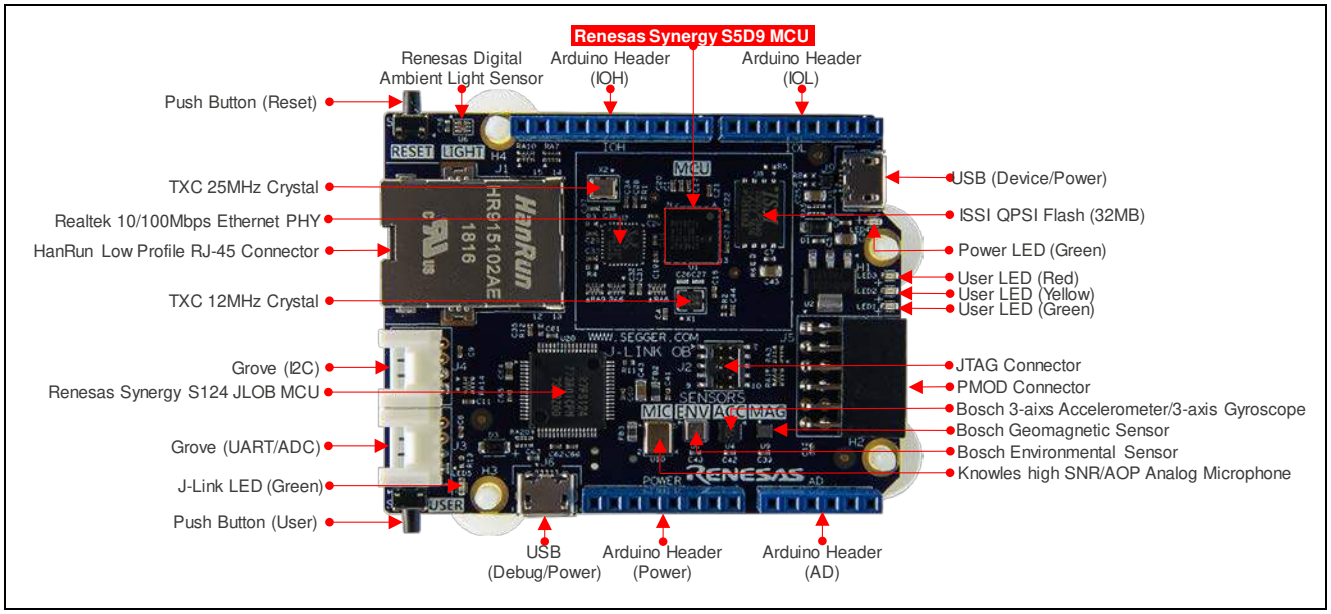

Figure 4 S5D9 Synergy MCU Board Components

1.1 Board Features

- Synergy S5D9 Arm® Cortex®-M4 Core
  - Arm®v7E-M architecture
  - Maximum operating frequency: 120 MHz
  - Secure Crypto Engine
  - Memory Protection Unit and Flash Access Window
  - Floating Point Unit
  - SWD debugging interface
- Memory
  - 640 KB SRAM
  - 2 MB Code Flash
  - 64 KB Data Flash
  - 32 MB External QSPI Flash
- Connectivity
  - Wired Ethernet (RJ45) 10/100 Mbps
  - USB 2.0 Full Speed
  - UART (through the Arduino or Seeed Grove connector)
  - I^2C (through the Arduino or Seeed Grove connector)
  - SPI (through the Arduino or Digilent PMOD connector)
- Sensors
  - Accelerometer and Gyroscope (Bosch BMI160)
  - Magnetometer (Bosch BMM150)
  - Environmental – Gas, Pressure, Temperature, Humidity (Bosch BME680)
  - Ambient Light (Renesas ISL29035)
  - Acoustic (Knowles MEMS microphone SPM0687LR5H-1)
- General Purpose I/O Ports
  - User-defined LEDs
  - User-defined button
  - Arduino Shield Headers
  - Seeed Studio's Grove Connectors
- Operating Voltage
  - 5V

2. What's in the Box

The AE-CLOUD2 kit includes the following components:

- Synergy S5D9 MCU board
- Wi-Fi module
- Cellular Arduino Shield
- Two USB cables and one Ethernet cable
- Cellular antenna
- GPS antenna
- Quick Start Guide (back side of packaging box cover)
- Important Notice and Disclaimer Card

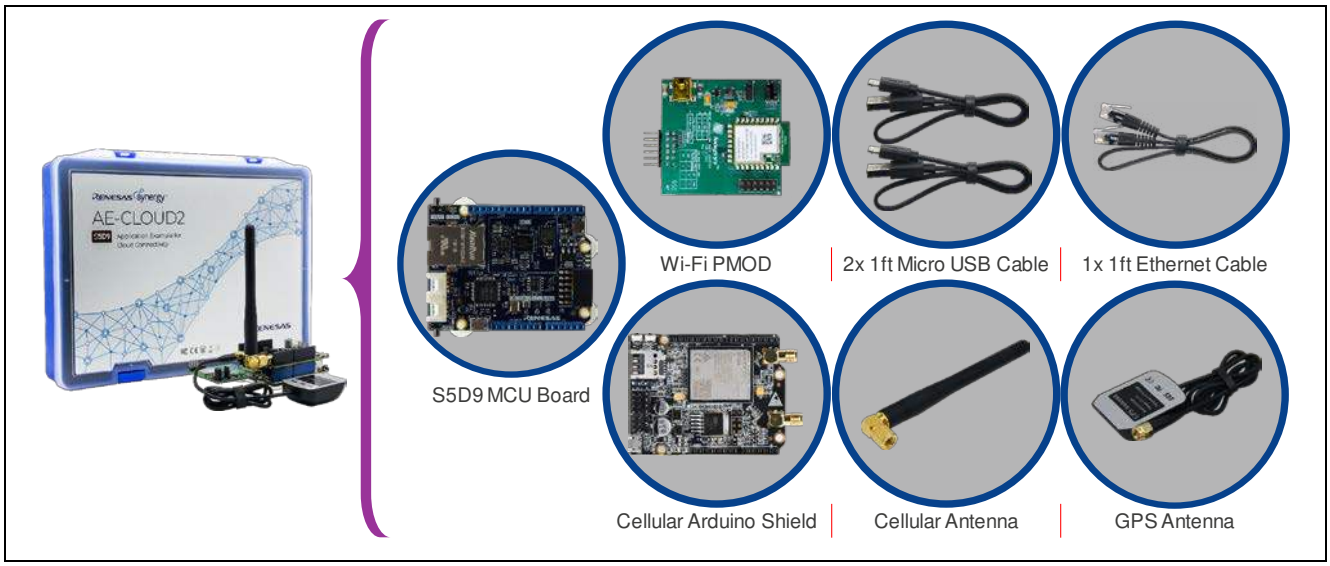

Figure 5 AE-CLOUD2 Box Contents

3. Getting Started

Before you start working with your development board, you must obtain the latest version of the Synergy Software Package (SSP), as well as the development tools needed to work with it.

If you are new to Synergy development, we encourage you to use the AE-CLOUD2 Quick Start Guide. This guide will provide detailed instructions on how to register an account on the Synergy Gallery to obtain a developer license, and how to download and install all software & tools that are required. Once you have completed these steps, please return to this section for more in-depth information on how to work with your S5D9 MCU board.

3.1 Connecting the Boards

Plug the Wi-Fi Module to the MCU board through a PMOD connector. Plug the Cellular Arduino Shield into the S5D9 MCU board. Be careful to align the Arduino Shield connector pins correctly.

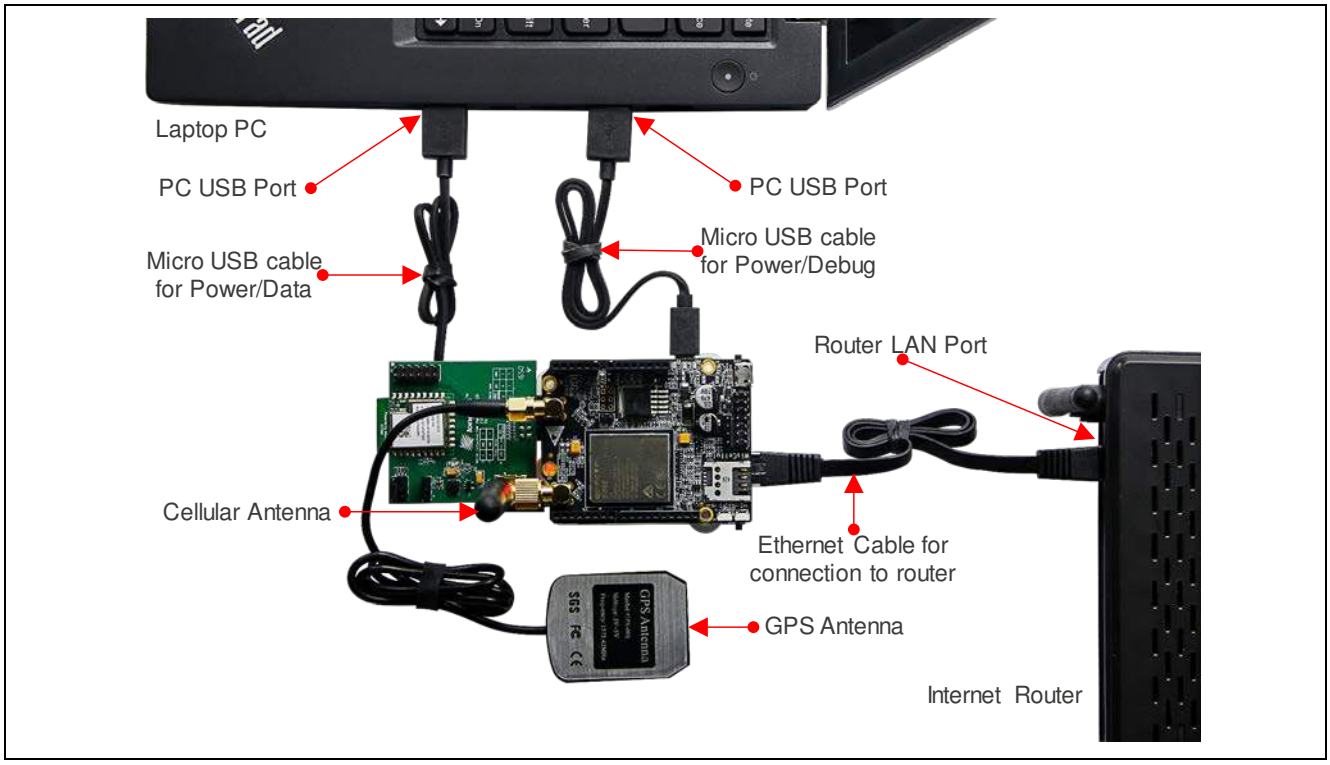

Figure 6 Connecting the Boards from the Kit

Connect the USB cables from J6 (for debugging) and from J9 (for communication) on the MCU Board to the host computer. The USB Device connector (J9) provides 5V power to the entire kit. The USB J-Link OB Debug connector (J6) provides 5V power only to the MCU board.

For cellular and GPS operation, connect the cellular antenna and the GPS antenna to their corresponding connectors on the Cellular Arduino Shield. As seen in Figure 6, the cellular antenna goes to the top connector.

3.2 Download Application Software

The kit comes without firmware pre-installed on its MCU board. The user is encouraged to download cloud connectivity example projects of their choice by searching for AE-CLOUD2 at http://renesassynergy.com.

On this kit webpage, the user can find links to the individual application projects for Microsoft Azure, Amazon Web Service (AWS), and Google Cloud Platform as well as Synergy Enterprise Cloud Toolbox demo and Medium One IoT Prototyping Sandbox tutorial.

4. S5D9 MCU Board

4.1 MCU Board Overview

Figure 7 shows the top view of the MCU Board. It is built around the versatile Renesas Synergy™ S5D9 Microcontroller. The SEGGER J-Link® On-board, using the Renesas Synergy™ S124 MCU, provides a debug interface so that no external programming probes are needed. The board is highly integrated with many sensors, external flash memory, Ethernet PHY, Arduino, Grove and PMOD connectors, buttons and LEDs. The rich functionality of the board makes it ideal for prototyping a wide range of IoT Solutions.

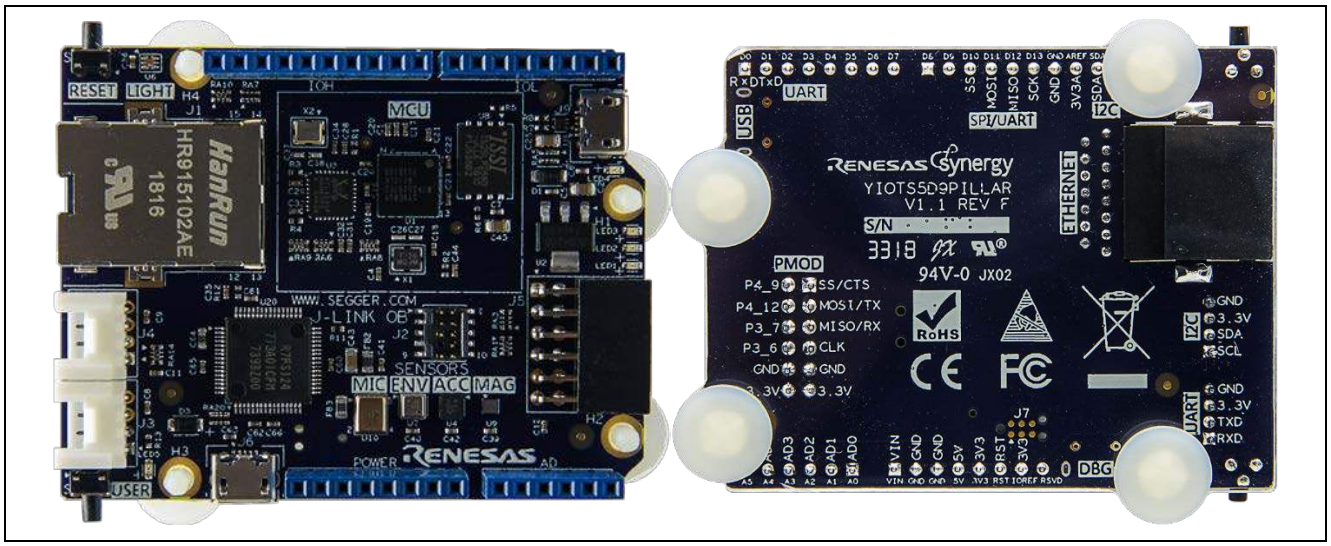

Figure 7 MCU Board

Figure 8 shows the MCU board main components. It includes all interfaces – both internal and external.

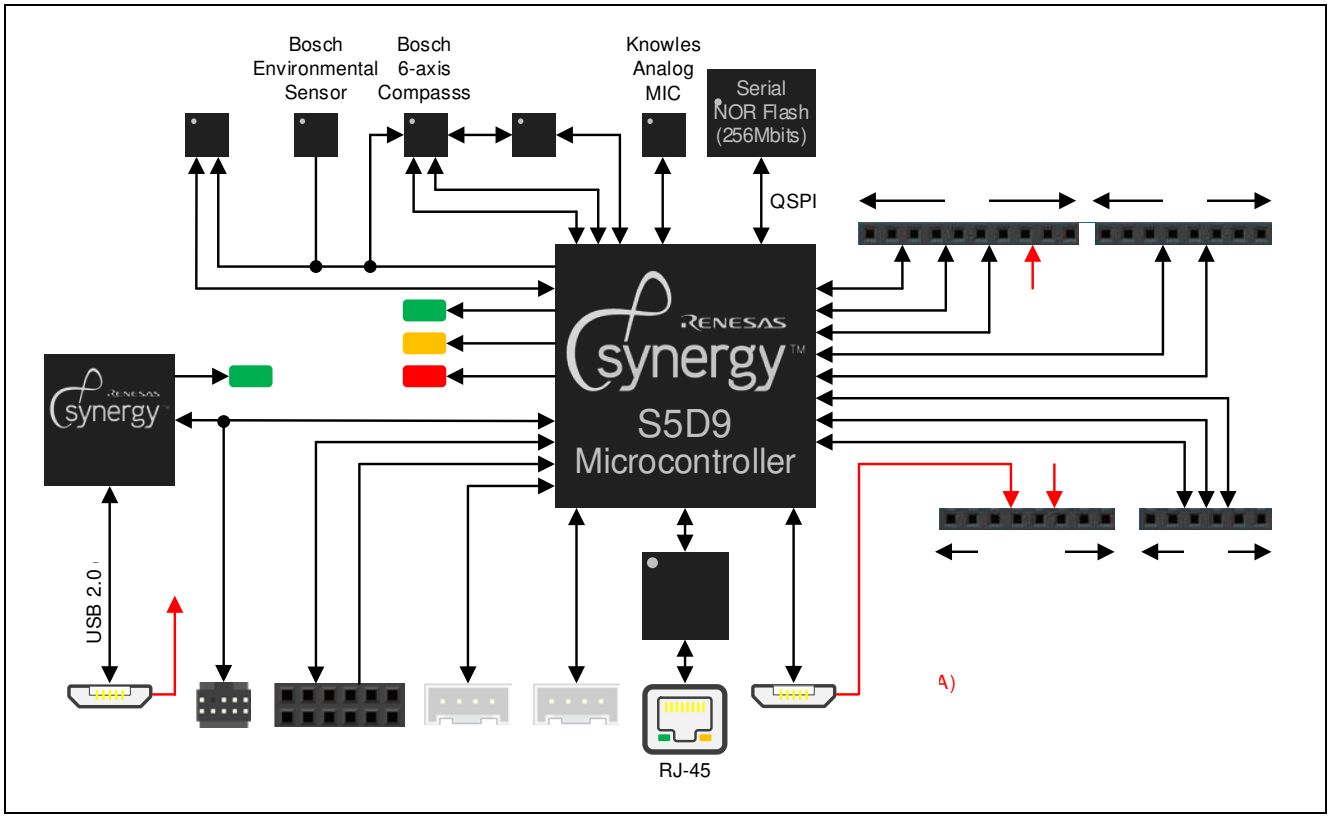

Figure 8 MCU Board System Architecture

The MCU board includes the following main components:

- The Synergy S5D9 MCU featuring 2 MB code flash/640 KB SRAM/64 KB data flash.
- A power management based on 3.3V LDO voltage regulator required for the operation of the microcontroller.
- Quad SPI flash – the MCU flash memory is expanded with external 256 Mbits (32 MB) memory device connected over a high-speed QSPI interface. The external flash can be used for storage of graphics and other digital assets, or for execution of code in place (XIP).
- User-defined LEDs – the user-defined LEDs are useful in indicating the current state of the firmware. The 3 LEDs have different colors for easy identification.
- USB device interface – the S5D9 MCU includes one USB interface operating at full speed. The USB device connector is also used to power the board.
- PMOD interface header – the board includes one 12-pin PMOD header that can be configured by a jumper to provide 3.3V on its power pins. The header enables interfacing with other devices over SPI or UART.
- Grove connectors – the Grove connectors are compatible with the Seeed Studio's line of peripheral modules that include a very large selection of sensors and actuators. One of the Grove connectors can be configured to communicate over UART and the other is dedicated for I^2C interface.
- J-Link On-Board SEGGER debugging probe based on Synergy S124 MCU.
- JTAG interface that is available on a 10-pin connector (J20) compatible with SEGGER debugging probe.
- The board includes a number of sensors described in detail in section 5.3.

4.2 Power Requirements

The AE-CLOUD2 is designed to be powered by the USB device interface on J9 connector.

The S5D9 board can supply power to the devices connected to it. The PMOD interface and the Grove connectors can power 3.3V peripherals.

The power supply requirements and current consumption specifications are listed in following table.

Table 1 Electrical Specifications

Parameter	Value	
	Minimum	**Maximum**
Power Supply Voltage	3.7V	5.5V
Current Consumption		500 mA
Digital Inputs Voltage	0V	3.3V
Digital Outputs Voltage	0V	3.3V
Operating Temperature	0°C	+75°C
PMOD Connector Power Voltage	3.3V	
Grove Connectors Power Voltage	3.3V	

4.2.1 Power Supply Options

The power supply source is the J9 - USB Micro-B connector providing 5 V and up to 500 mA of power.

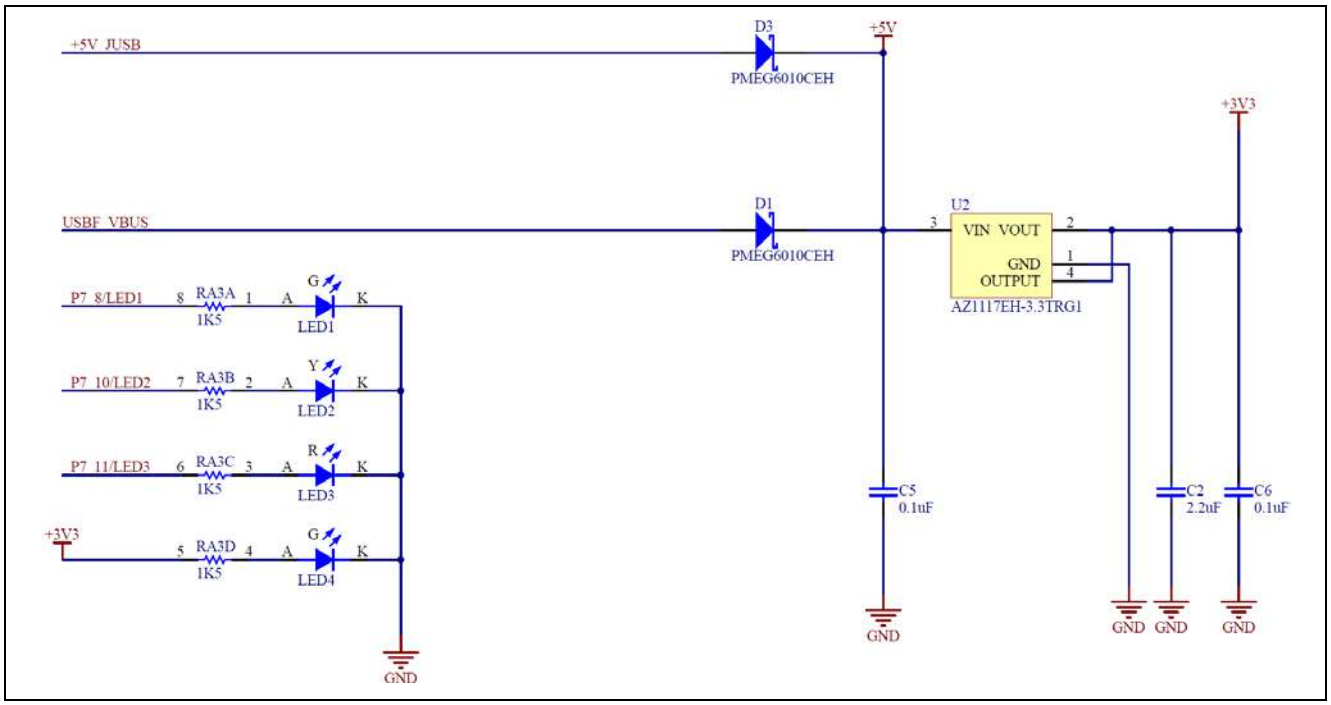

Figure 9 Power Supply Management

Note that the Schottky diodes provided are in series with the power source. This protects them from overload in case both are connected and one has higher voltage than the other.

4.2.2 Power-up Behavior

Upon power up, the MCU is idle until its RESET pin registers transition to logic 1. At this point, the MCU hardware samples the logic level of the MD pin. The MD pin level determines if the MCU will enter 'Factory Boot Mode'. In this mode, the MCU executes an internal firmware code that initializes the USB interface and prepares the device to communicate with utilities that can update the content of its memory.

The state of the MD pin at startup is defined by S2. If the button is pressed at the time of the RESET signal, then the factory bootloader will execute on startup. If S2 is not pressed at the time of the RESET signal, then the MCU will execute the code previously loaded to the MCU code flash memory.

4.3 Installed Sensors

The on-board sensors provide variety of options when it comes to prototyping IoT applications:

- **Accelerometer, Gyroscope and Magnetometer**: Bosch Sensortec - BMI160 (U4) and BMM150 (U9)
  - BMI160 is an extremely small low power and low noise 6-axis accelerometer and gyroscope.
  - The integrated accelerometer provides all functionalities of Bosch Sensortec's leading-edge 12-bit digital accelerometer, including a 32-frame FIFO buffer storing acceleration data.
  - The interface to the MCU is based on the I^2C protocol. The sensor has hard coded individual addresses:
    - Accelerometer = 0x68
    - Magnetometer = 0x10
  - Connected to MCU I^2C Channel 2 with pins configured to use Port 5 bits 11 and 12:
    - Data (SDA) = P5_11
    - Clock (SCL) = P5_12
- **Environmental Sensor**: Bosch Sensortec. – BME680 (U7)
  - The BME680 is a digital 4-in 1 sensor with gas, humidity, pressure, and temperature measurement based on proven sensing principles
  - The interface to the MCU is based on the I^2C protocol. The sensor has hard coded address on the I^2C Bus: 0x76.
  - Connected to MCU I^2C Channel 2 with pins configured to use Port 5 bits 11 and 12:
    - Data (SDA) = P5_11
    - Clock (SCL) = P5_12
- **Ambient Light Sensor: Renesas** - ISL29035 (U6)
  - The ISL29035 is an integrated ambient and infrared light-to-digital converter with I^2C bus interface. Its advanced self-calibrated photodiode array emulates human eye response with excellent IR rejection. The on-chip 16-bit ADC is capable of rejecting 50 Hz and 60 Hz flicker caused by artificial light sources. The Lux range select feature allows users to program the Lux range for optimized counts/Lux.
  - The interface to the MCU is based on the I^2C protocol. The sensor has hard coded address on the I^2C bus: 0x44
  - Connected to MCU I^2C Channel 2 with pins configured to use Port 5 bits 11 and 12:
    - Data (SDA) = P5_11
    - Clock (SCL) = P5_12
- MEMS Microphone: Knowles SPM0687LR5H-1 (U10)
  - The SPM0687LR5H-1 is a miniature, high-performance, low power, top port silicon microphone. It consists of an acoustic sensor, a low noise input buffer, and an output amplifier.
  - The device has the following main features:
    - 20 dB of Gain
    - Low current consumption
    - MaxRF protection
    - Ultra-stable performance
    - Omnidirectional
  - The microphone output is wired to MCU ADC Channel 1 (P0_1).

Table 2 Summary of the Sensors and their MCU Interfaces

Sensor	I2C MCU Ch 2 Bus Address	Interrupt Request	ADC Channel Number	Manufacturer
BMI160 Accelerometer	0x68	IRQ9 (INT1), IRQ8 (INT2)	N/A	Bosch
BMM150 Magnetometer	0x10	IRQ4		
BME680 Humidity and Temperature	0x76	N/A		
ISL29035 Light Sensor	0x44	IRQ7		Renesas
SPM0687LR5H-1 Microphone	N/A	N/A	1 (P0_1)	Knowles

4.4 Connectivity and Settings

4.4.1 RJ45 Ethernet Connector

The S5D9 MCU Board features standard Ethernet connector RJ45 with built-in magnetics. It is connected to RealTek PHY interface P/N: RTL8189EM-CG. The PHY is connected to the MCU via RMII interface. The RJ45 connector is HanRun Electronics Ltd. P/N: HR915102AE. Its front view is shown in Figure 10.

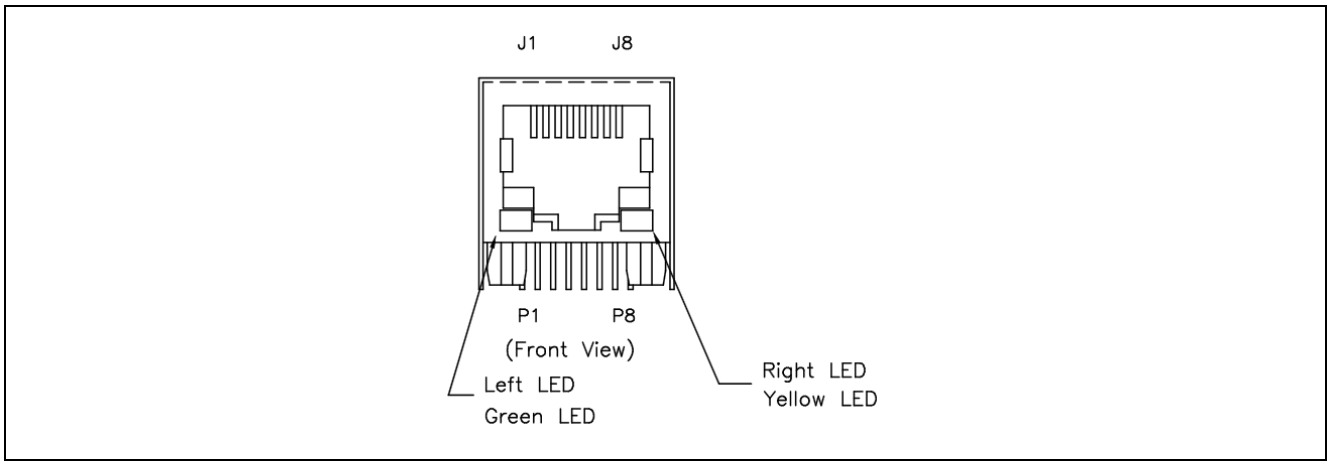

Figure 10 RJ45 Ethernet Connector

The pin mapping of the connector matches the standard for Ethernet ports. The pin mapping is shown in the following table.

Table 3 Ethernet RJ45 pin map

Pin Number	RJ45 Ethernet Port
1	TX+
2	TX-
3	RX+
4	neutral
5	neutral
6	RX-
7	neutral
8	neutral

4.4.2 PMOD Connector

The S5D9 MCU board includes one PMOD connector. It can interface with modules that require UART, I²C, or SPI interface. The function of the PMOD is dependent on the MCU pin functions initialization. The PMOD connector pin map is shown in the following table.

Table 4 PMOD Pin Functions

Pin Number	PMOD (J5)
1	SSLB0/CTS9 – P2_5
2	MOSI/TXD9 – P2_3
3	MISO/RXD9 – P2_2
4	RSPCK/SCK9 – P2_4
5	GND
6	3.3V
7	GPIO – P4_9/IRQ6
8	GPIO – P4_12
9	GPIO – P3_7
10	GPIO – P3_6
11	GND
12	3.3V

Figure 11 shows the schematic of the PMOD interface.

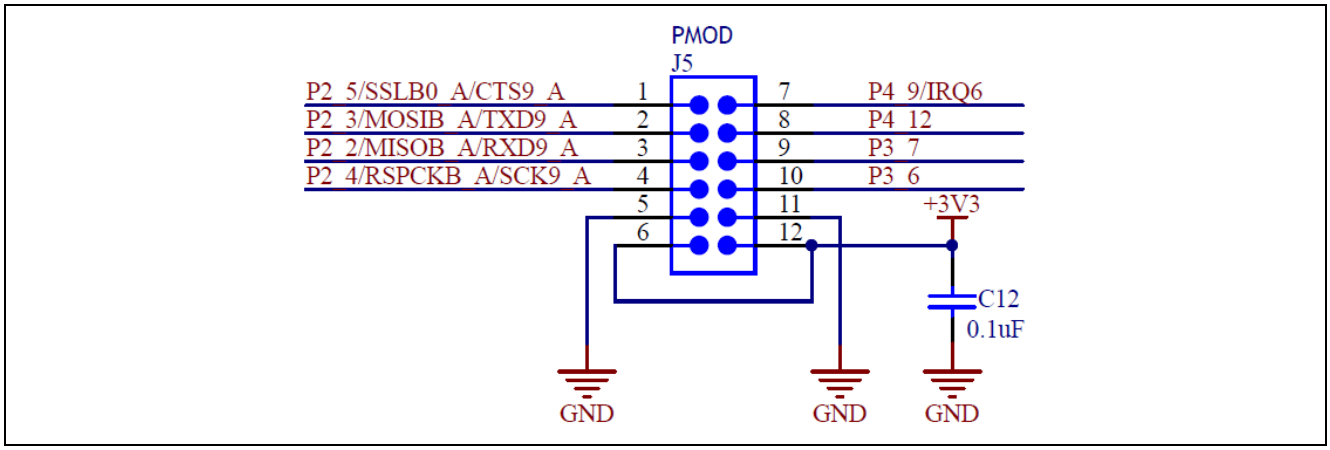

Figure 11 PMOD Interface Schematic

4.4.3 Grove A and B Connectors

The Grove connectors offer the following interfaces:

- UART / I²C or Analog interface (Grove A – J3)
- I²C interface (Grove B – J4)

The pin-mapping of the connectors is described in following table.

Table 5 Grove Connector Pin Mapping

Pins	Grove A (J3) UART	Grove B (J4) I²C
1	P5_5/SCL6/RXD6/AN118	P1_0/SCL1
2	P5_6/SDA6/TXD6/AN019	P1_1/SDA1
3	3.3 V	3.3 V
4	GND	GND

Note that the specific function of the Grove A (J3) depends on the pin-muxing configuration controlled by the application specific needs.

Figure 12 shows the schematic of the Grove interfaces.

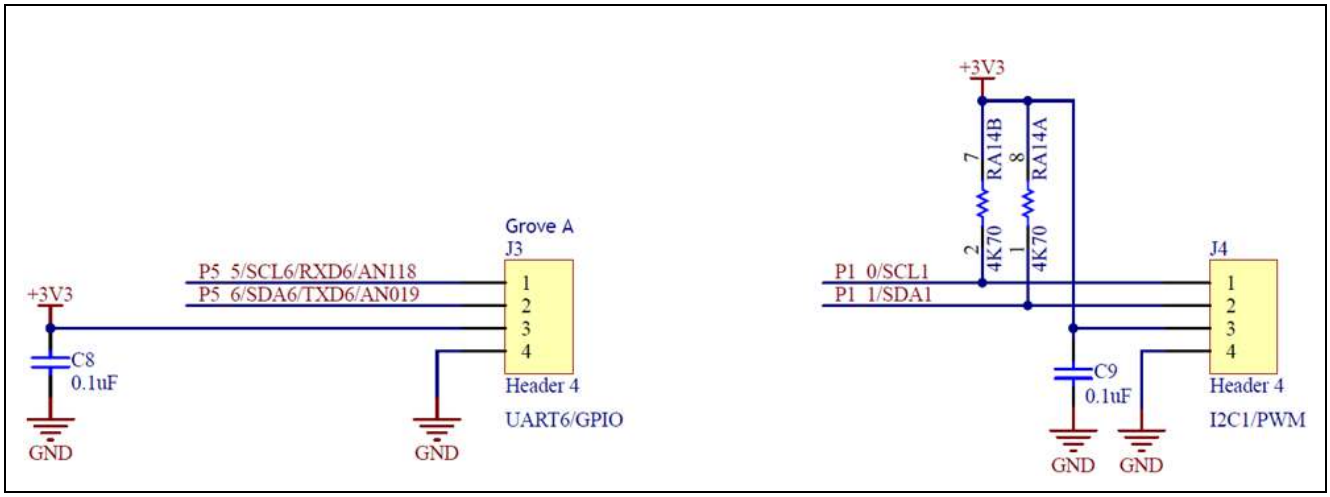

Figure 12 Grove Connectors Schematic

4.4.4 On-Board LEDs

The S5D9 MCU board provides 3 on-board LEDs for user-defined functions. A fourth LED is used to indicate 3.3V power presence. The LEDs are connected to general purpose output pins through a single resistor. The output active state is 1. The table below describes the mapping between the LEDs and the ports that drive them.

Table 6 LED to Port Mapping

LED Number	Color	Designator	Device Port/Pin
1	Green	LED1	P7_8
2	Yellow	LED2	P7_10
3	Red	LED3	P7_11
4	Green	LED4	N/A (Power indicator)

Figure 13 shows the schematic of the user LEDs.

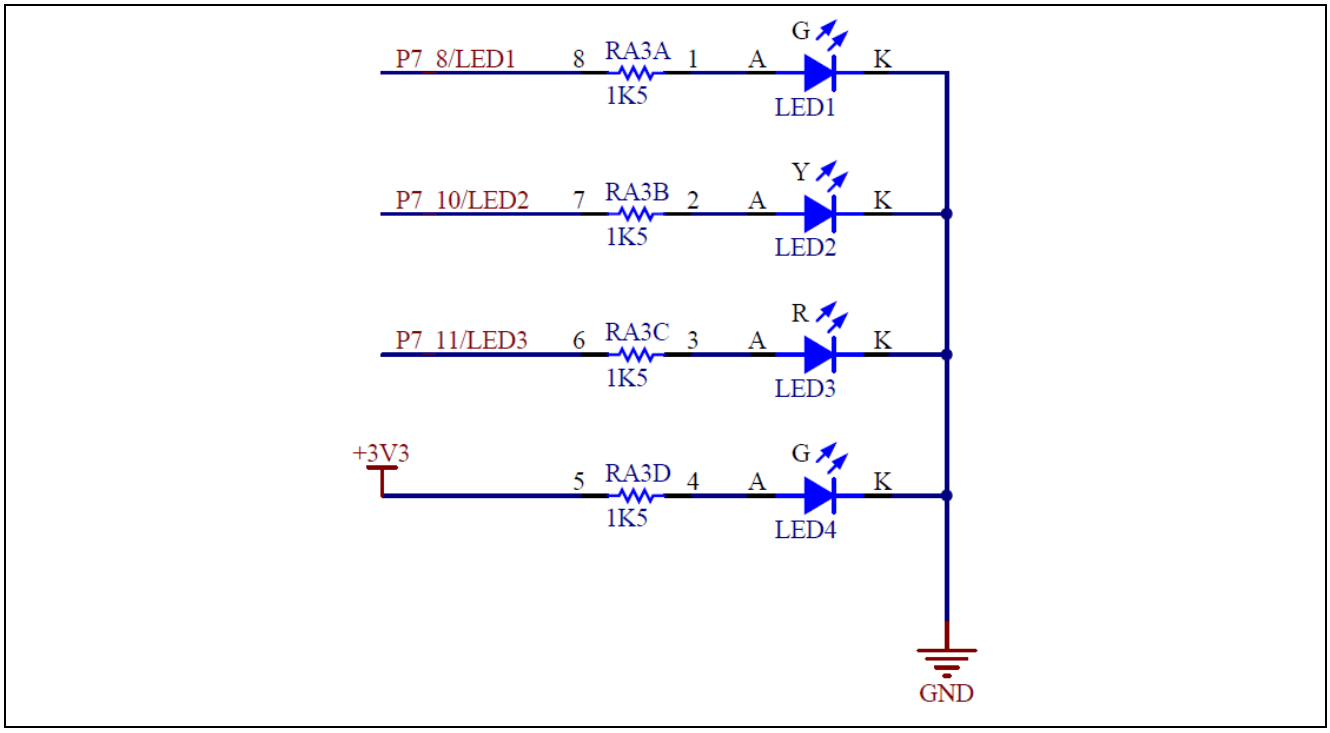

Figure 13 LED Schematic

4.4.5 USB Device

This USB Micro-B connection jack connects the S5D9 MCU to an external USB 2.0 Host, Full Speed capable. The USB power presence (VBUS) is wired to GPIO input P4_7 after it is passed through resistor divider.

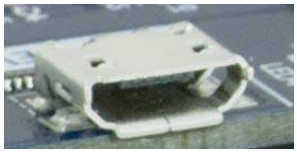

Table 7 USB Device Connector to S5D9 MCU Pin Mapping

USB Device Connector		S5D9 Microcontroller	
Pin	**Description**	**Pin**	**Description**
1	VBUS, +5VDC	P4_7/USB_VBUS	USB Voltage detection
2	Data-	USB_DM	Negative data line
3	Data+	USB_DP	Positive data line
4	USB ID, jack internal switch, cable inserted	-	(Not connected)
5	Ground	VSS	Circuit Ground

Figure 14 shows the USB interface schematic.

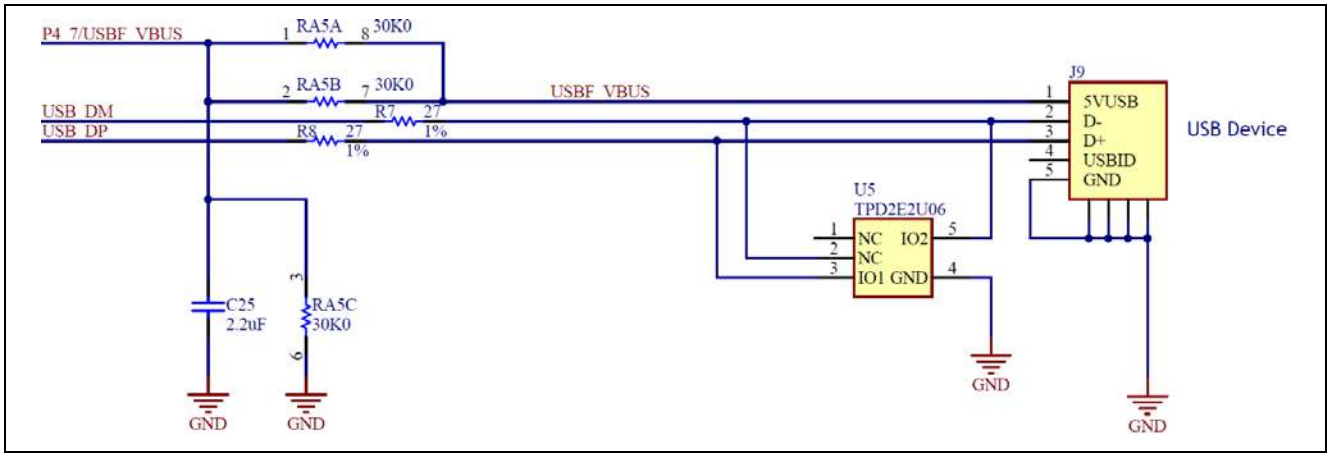

Figure 14 USB Interface Schematic

4.5 Arduino-Compatible Expansion Headers

The S5D9 MCU board includes Arduino-compatible headers that enable interfacing with a wide range of Arduino Shields and expanding its features. Most of the interface signals are connected directly to the MCU pins. This enables their configuration to change depending on the application needs. Figure 15 indicates the port and pin number for each interface signal along with its primary role. The specific function and pin-muxing depends on the application and the hardware specifics of the S5D9 MCU.

Note that the 5V power brought to the POWER header pin 4 is connected directly to the USB VBUS power rail from the USB device connector (J6).

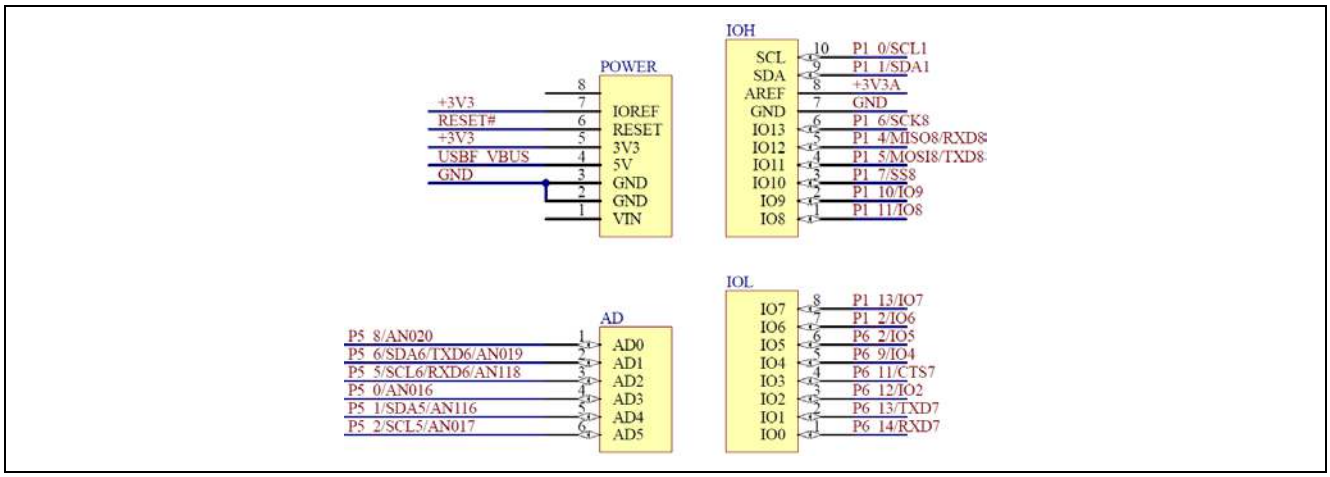

Figure 15 Parallel I/O expansion Schematic

Table 8 shows the mapping between the Arduino headers pins and the MCU pins connected to them along with their primary and additional functions.

Table 8 Arduino Headers Pin Map

Arduino Header Pin Number	Arduino Pin Name	MCU GPIO Port	Primary Pin Function	Alternative Pin Function
POWER				
1	Vin	N/C		
2	GND	GND	Ground	
3	GND	GND	Ground	
4	5V		USB_VBUS	
5	3.3V	3.3V		
6	RESET	RESET		
7	3.3V	3.3V		
8	Reserved	N/C		
AD				
1	AD0	P5_8	AN020	
2	AD1	P5_6	AN019	SDA6 / TXD6
3	AD2	P5_5	AN118	SCL6 / RXD6
4	AD3	P5_0	AN016	
5	AD4	P5_1	AN116	SDA5 – I2C Data
6	AD5	P5_2	AN017	SCL5 – I2C Clock
IOL				
1	IO0	P6_14	GPIO	RXD7 – UART
2	IO1	P6_13	GPIO	TXD7 – UART
3	IO2	P6_12	GPIO	
4	IO3	P6_11	GPIO	CTS7 – UART
5	IO4	P6_9	GPIO	
6	IO5	P6_2	GPIO	
7	IO6	P6_1	GPIO	
8	IO7	P6_13	GPIO	
IOH				
1	IO8	P1_11	GPIO	
2	IO9	P1_10	GPIO	
3	IO10	P1_7	GPIO	SS8 – SPI Slave Select
4	IO11	P1_5	GPIO	MOSI8 – SPI MOSI
5	IO12	P1_4	GPIO	MISO8 – SPI MISO
6	IO13	P1_6	GPIO	SCK8 – SPI Clock
7	GND	GND	Ground	
8	AREF	3.3V Analog	Analog Power 3.3V Reference	
9	SDA	P1_1	GPIO	SDA1
10	SCL	P1_0	GPIO	SCL1

4.6 Electrical Schematics

4.6.1 Power Supply, User LED Schematic

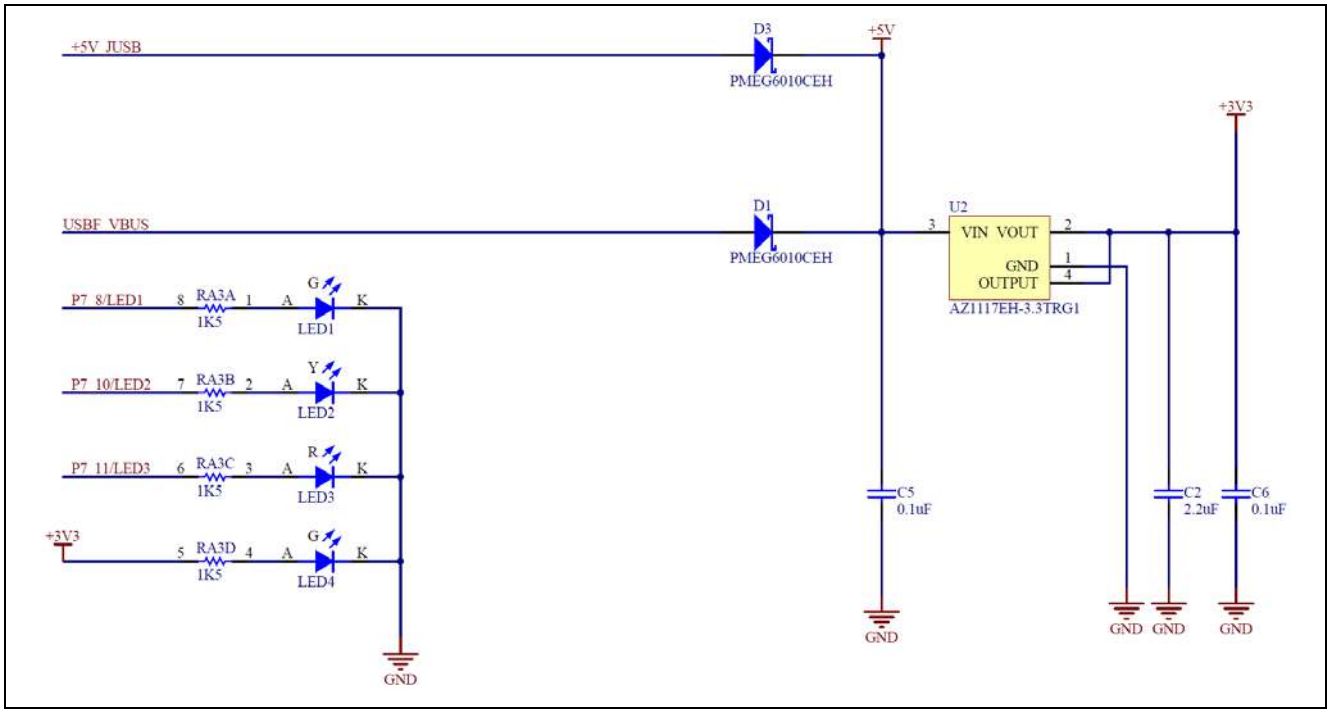

4.6.2 S5D9 MCU, Reset Circuit, QSPI Flash Memory Schematic

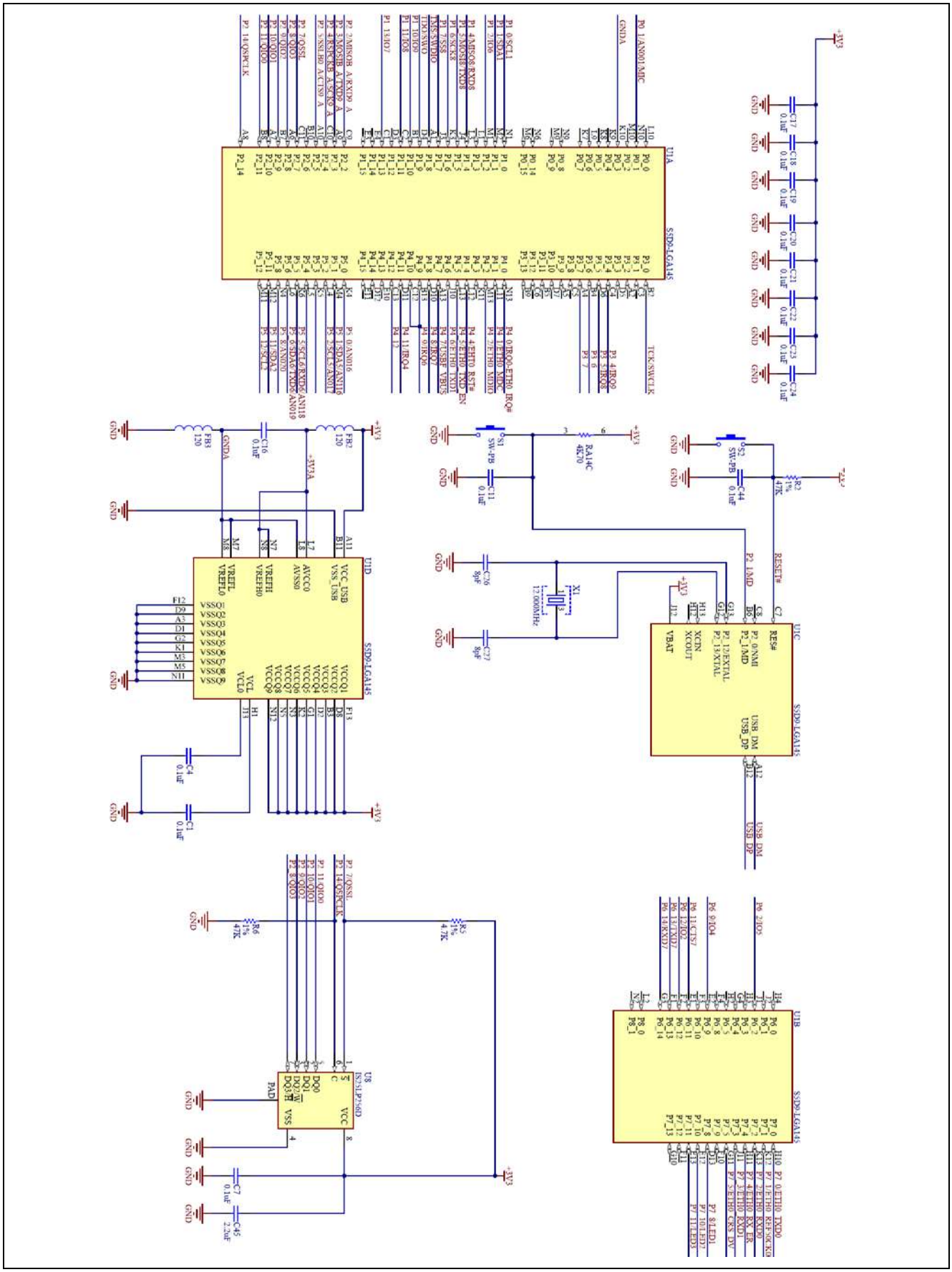

4.6.3 Ethernet Interface, PHY Schematic

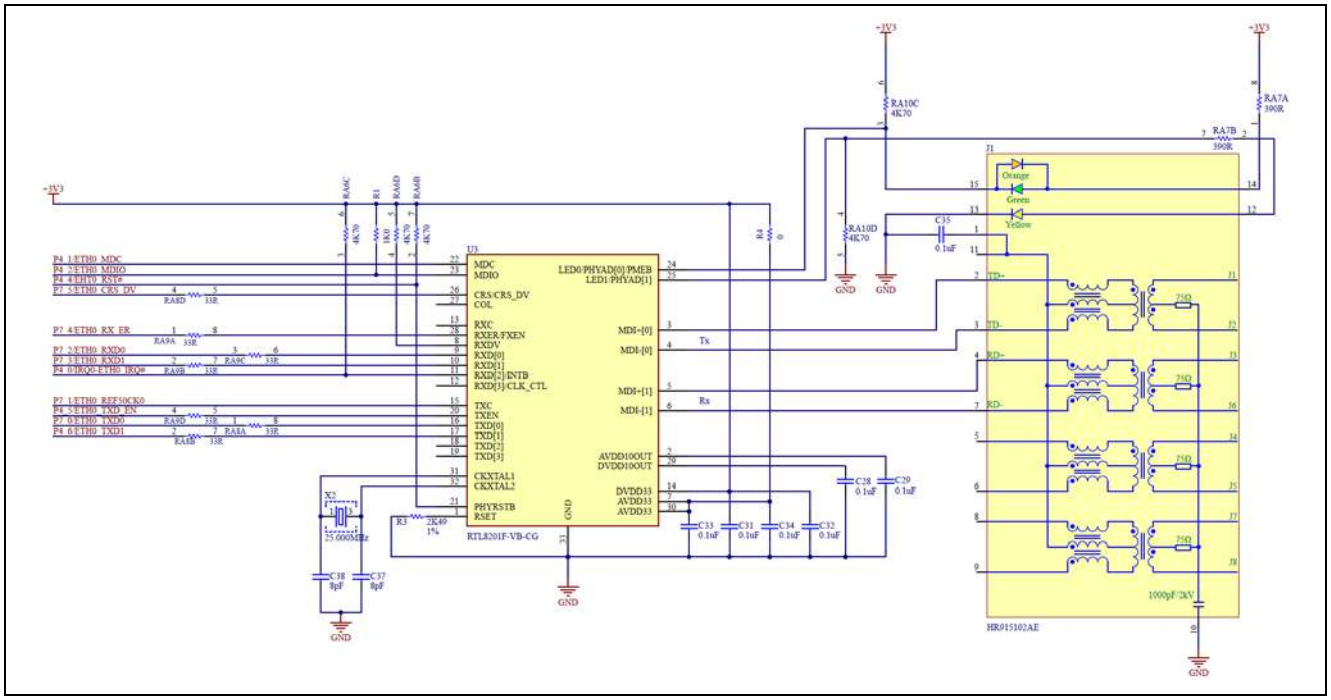

4.6.4 USB Interface Schematic

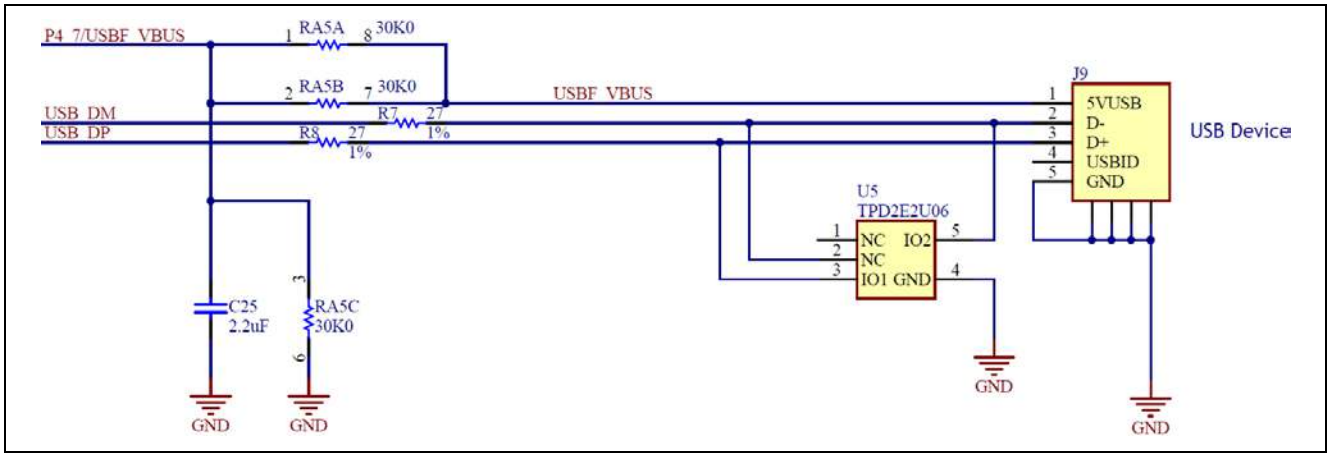

4.6.5 Sensors Schematic

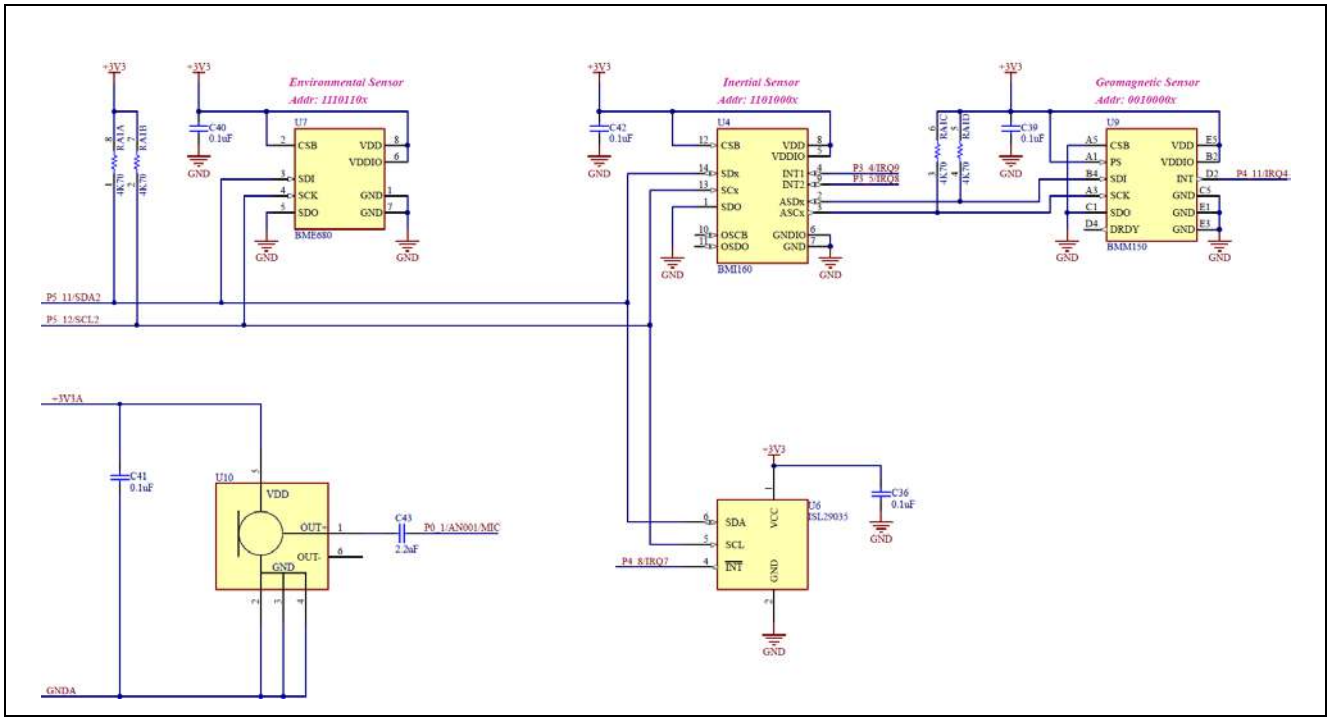

4.6.6 Arduino, PMOD and Grove Connectors Schematic

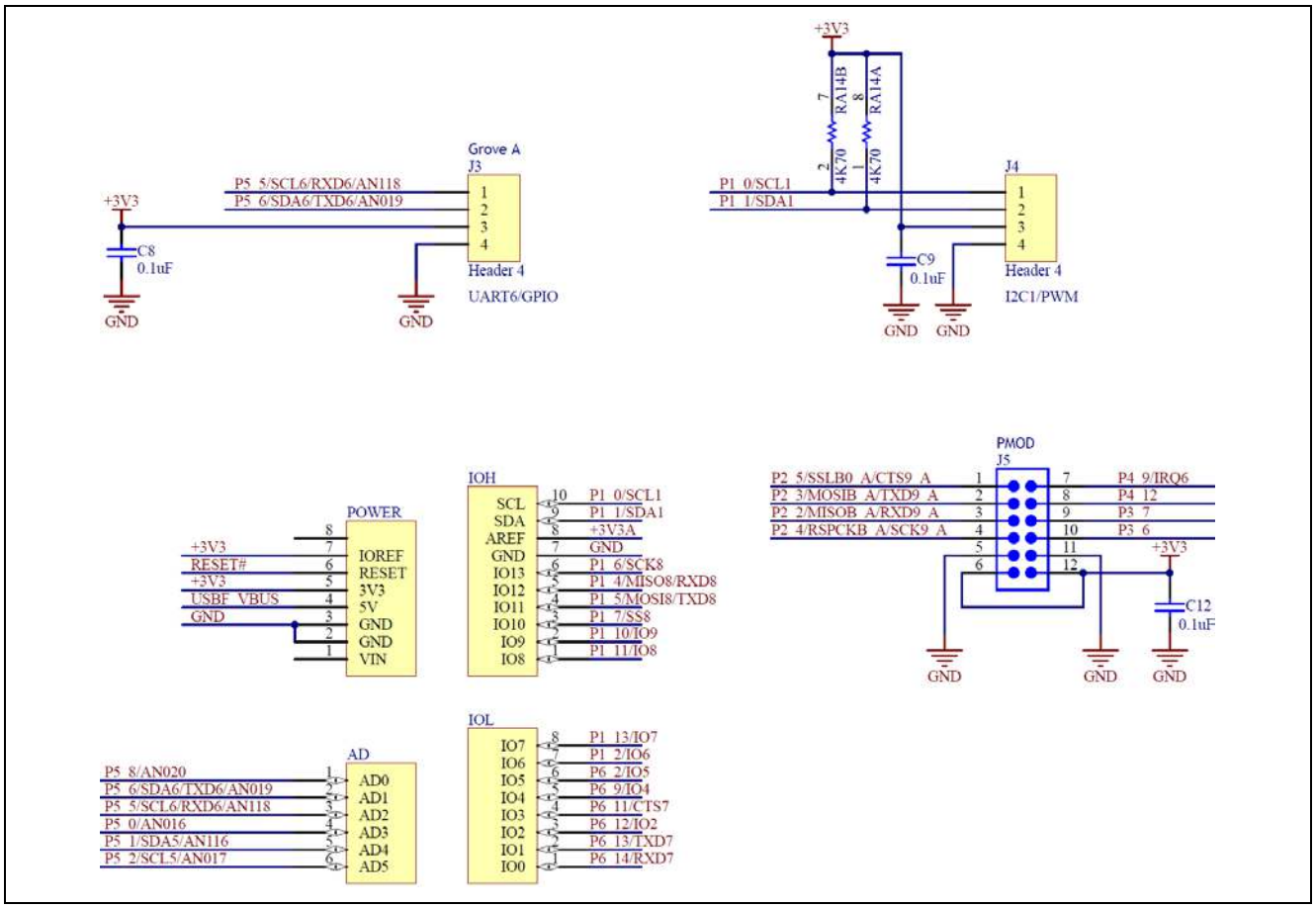

4.6.7 J-Link On-Board, JTAG Interface Schematic

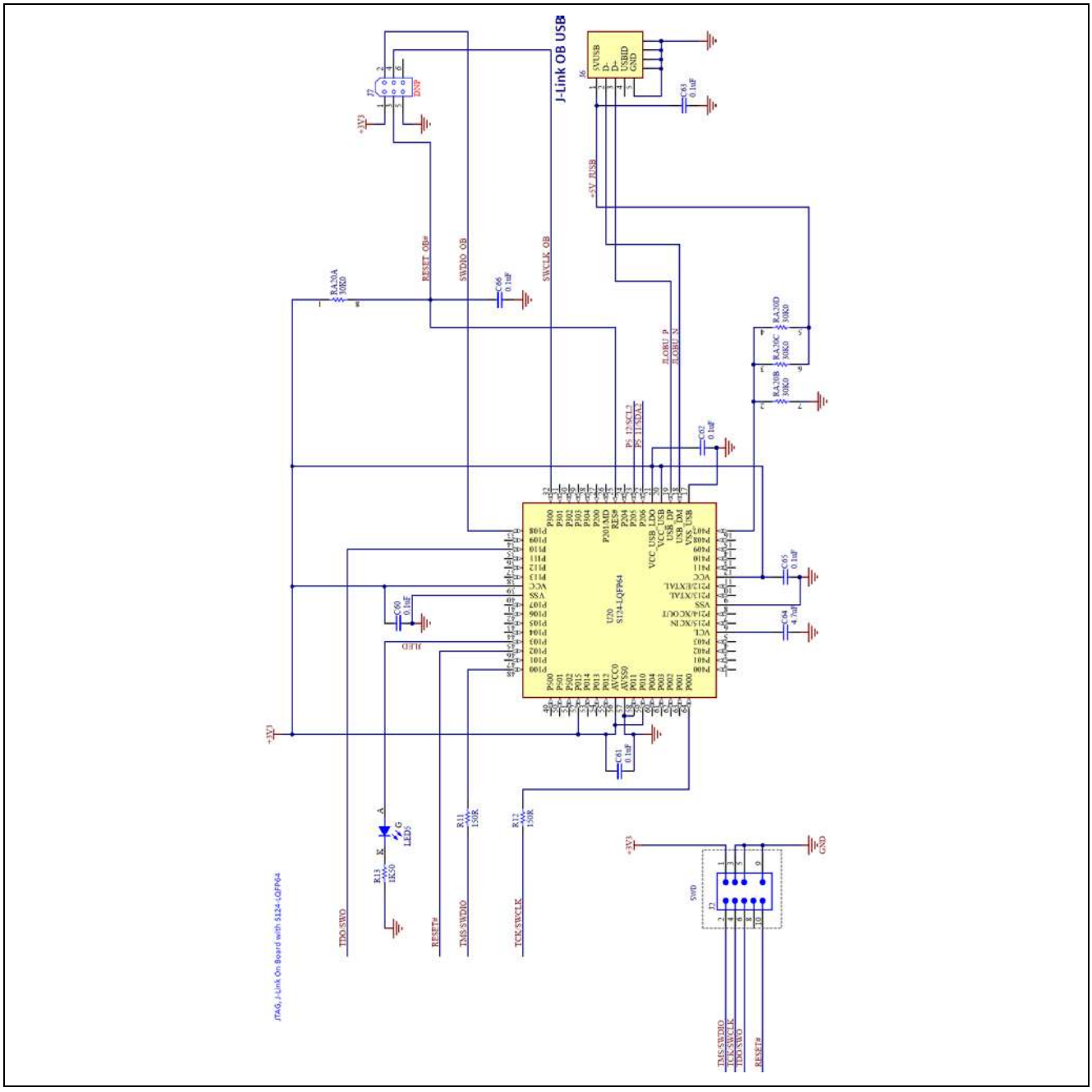

4.7 MCU Board Mechanical Dimensions

(All dimensions are in millimeters)

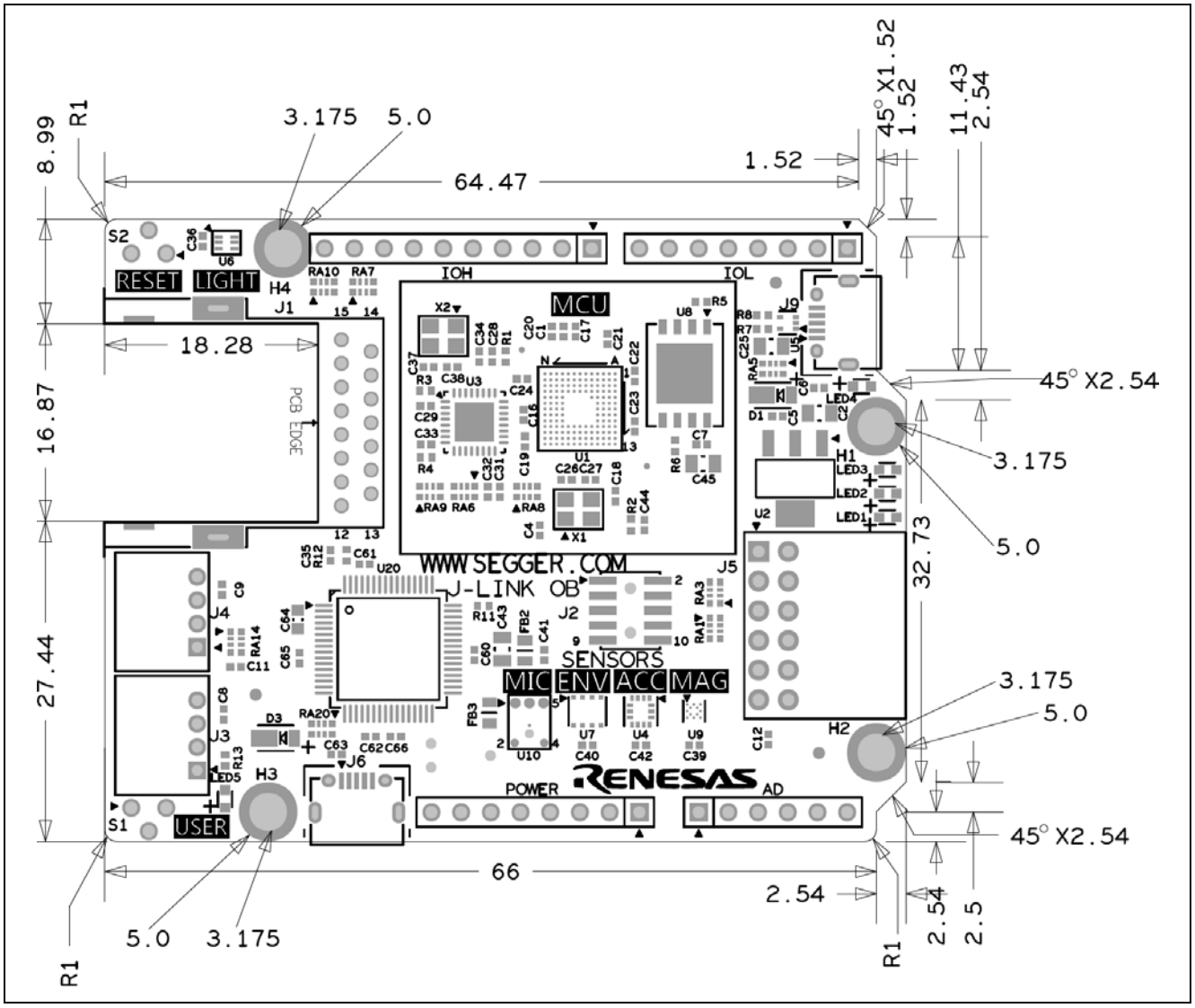

5. Wi-Fi Board

The Wi-Fi board is based on the GT202 module. It incorporates the Qualcomm® Atheros QCA4002 device. The QCA4002 is a system on a chip (SoC), implementing the 802.11 b/g/n communication standards. It is optimized for low-power embedded applications with single-stream capability for both transmit and receive streams. The SoC has an integrated network processor with a large set of TCP/IP with IPv4/IPv6-based services. They can be accessed via high-speed SPI interface that is accessible on a 12-pin PMOD header.

Table 9 Wi-Fi Board Specifications

Parameter	Value
Size	Area: 24 x 18 x 2.5 mm Height: 3.6 mm
Operating voltage	3.3V ± 10%
Operating humidity	20-70%
Operating temperature range	10°C ~ +65°C
RF connector	U.FL of Hirose
Host interface	UART, SPI

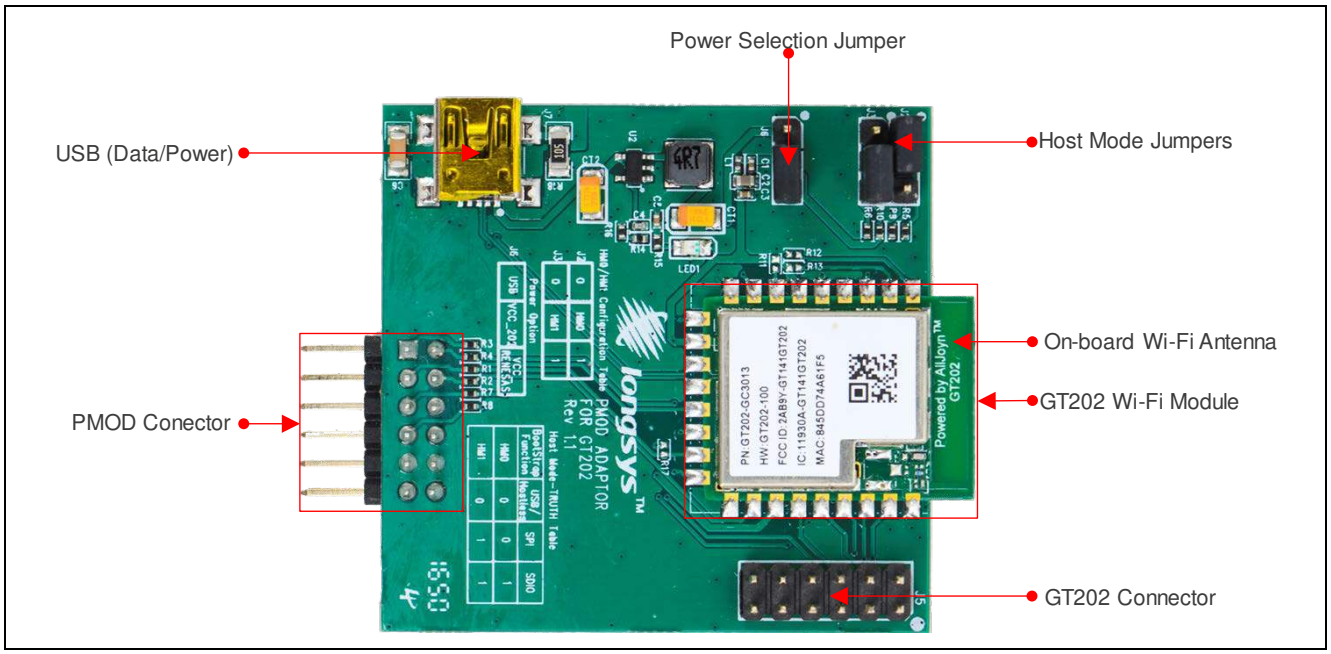

Figure 16 Main Wi-Fi Board Components

5.1 Wi-Fi Board Block Diagram

Figure 17 shows the Wi-Fi board block diagram. Its main component is the GT202 module that incorporates the QCA4002 SoC. The power options include USB and PMOD header. The 5V USB power is regulated to 3.3V with a step-down converter to 3.3V. A dedicated jumper is used to select the desired power source.

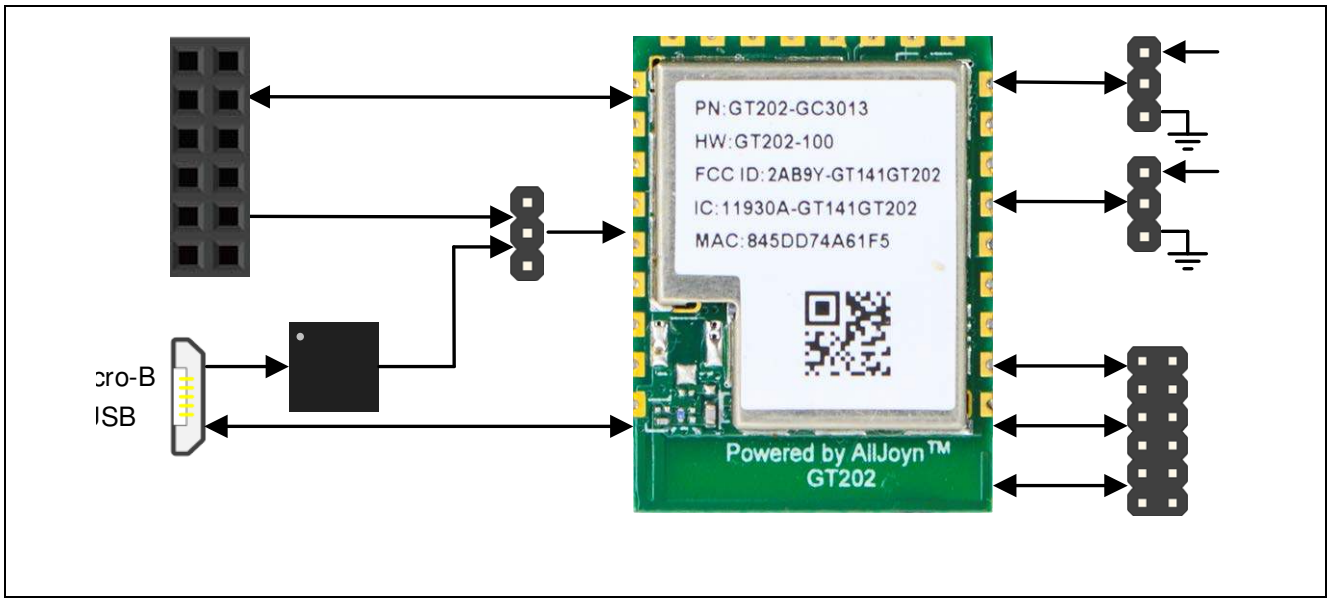

Figure 17 Wi-Fi Board Block Diagram

The GT202 Wi-Fi module integrates the QCA4002 SoC on a carrier board which brings out three different host connectivity options:

- SPI interface through the PMOD connector – used for interfacing with the AE-CLOUD2 MCU board and power supply source. This interface provides fast communication speed and access to the full networking functionality.
- SDIO / UART interface – used for rapid prototyping and low communication speeds (not utilized by the AE-CLOUD2 kit)
- USB interface / Host-less – used for fast prototyping, diagnostic and alternative power supply (not utilized by the AE-CLOUD2 kit)

5.2 Wi-Fi Board Jumper Settings

The Wi-Fi board includes jumpers that configure the desired host connectivity option. The jumper settings that control these options are described in Table 10.

Table 10 Jumper Settings Controlling Host Connectivity Options

Jumper J2 bridge pins	Jumper J3 bridge pins	Communication Interface
1 - 2	1 - 2	USB
1 - 2	2 - 3	SPI
2 - 3	2 - 3	SDIO/UART

The power selection jumper setting is described in Table 11.

Table 11 Power Selection Jumper Settings

Jumper J6 bridge pins	Power Source
1 - 2	USB
2 - 3	PMOD

The settings required for the operation of the AE-CLOUD2 kit are defined as follows:

Host mode jumpers (J2 and J3) to select SPI Communication Interface

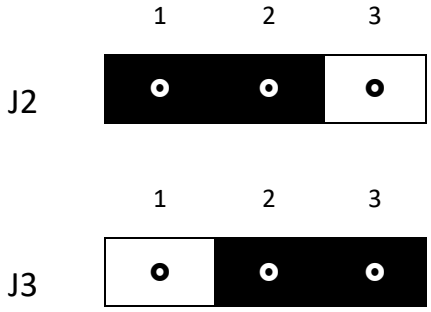

Power selection jumper (J6) to select PMOD

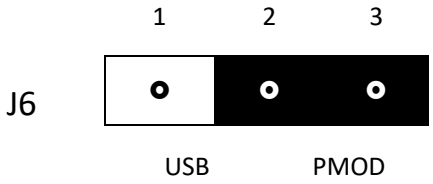

Wi-Fi Board PMOD Connector pin map is described as follows. The PMOD specification allows for configurable voltage. However, this Wi-Fi PMOD board is a 3.3V device. The S5D9 MCU board is configured to provide 3.3V to the PMOD interface.

Table 12 PMOD Pin Map

Pin Number	Function	Pin Number	Function
1	CS	7	Interrupt (Out)
2	MOSI	8	Power Down (In)
3	MISO	9	N.C.
4	CLK	10	N.C.
5	GND	11	GND
6	3.3V	12	3.3V

5.3 Wi-Fi Board Schematic

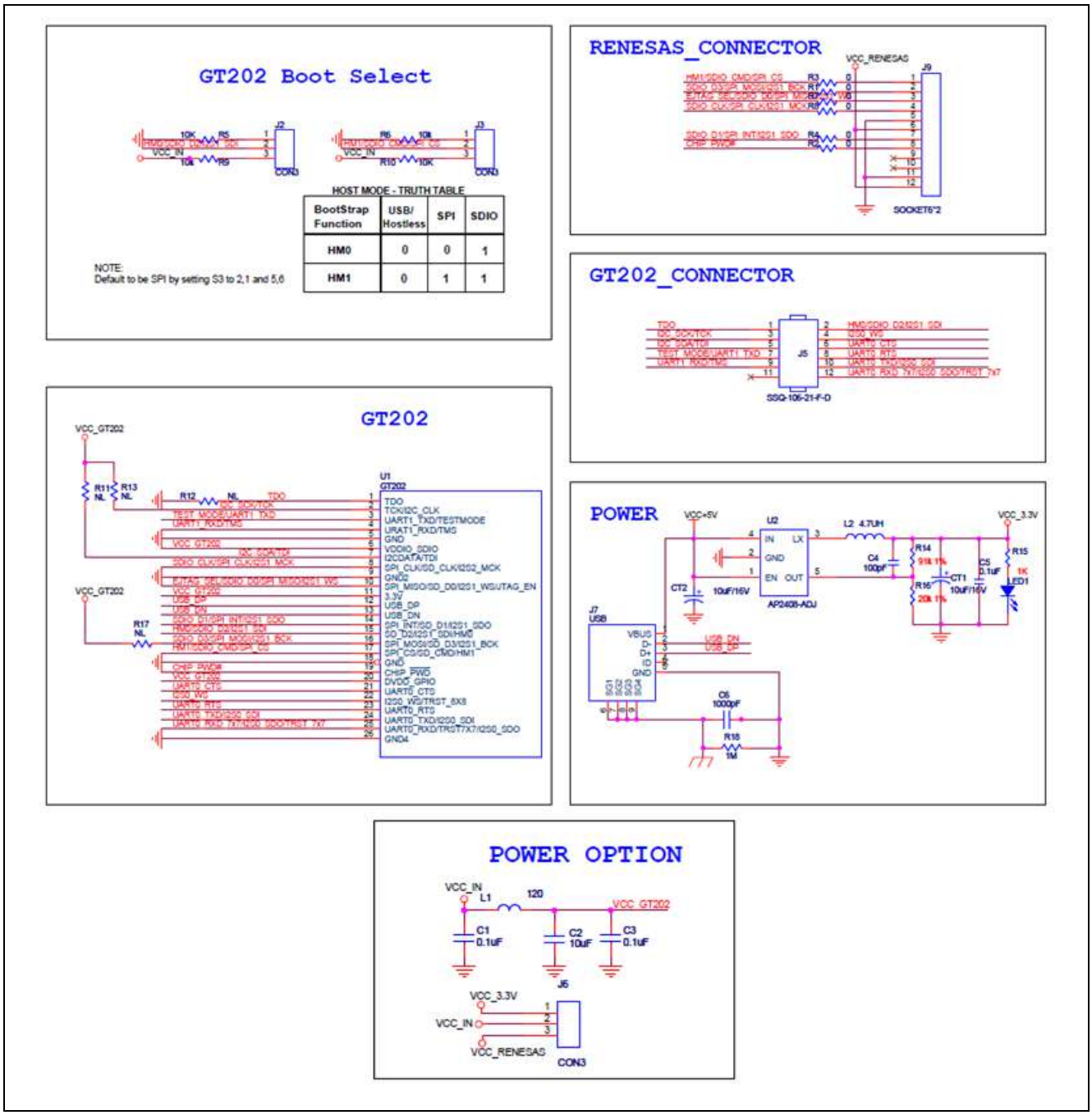

Figure 18 Wi-Fi Board Schematic

5.4 Wi-Fi Board Mechanical Dimensions

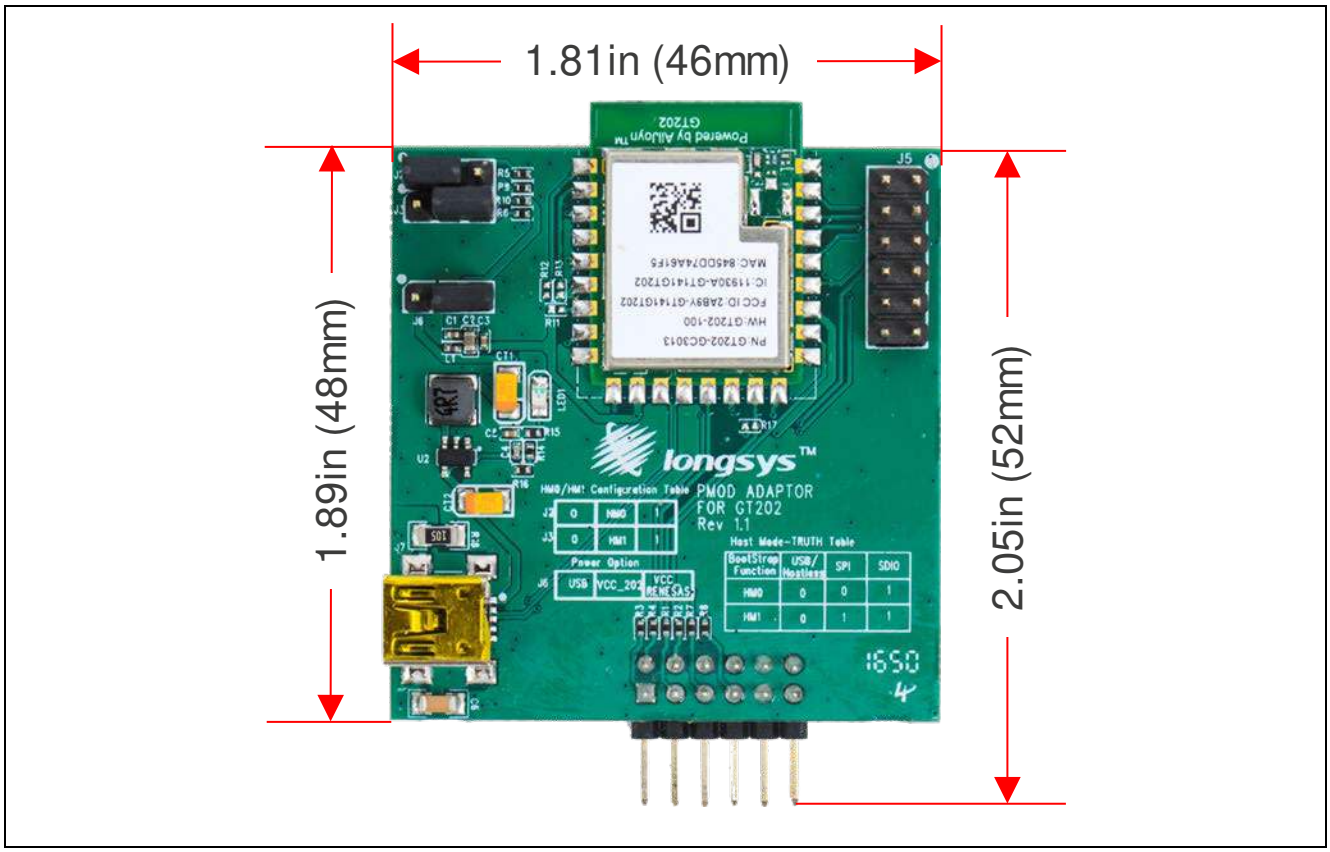

Figure 19 Wi-Fi Board Mechanical Dimensions

6. Cellular Connectivity Board

The AE-CLOUD2 provides cellular connectivity by utilizing Quectel BG96 modem, installed on an Arduino Shield board. The BG96 module supports multiple cellular standards as well as a GPS receiver that enables the prototyping of position tracking applications.

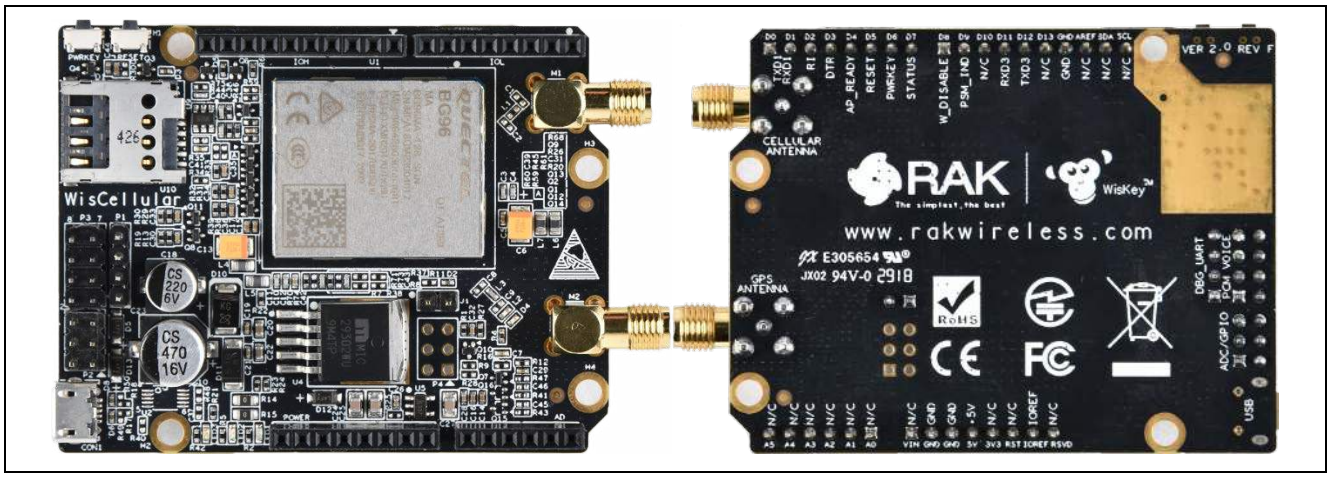

Figure 20 Cellular Connectivity Board

6.1 Cellular Arduino Shield Block Diagram

Figure 21 shows the BG96 module connections to the main components and headers.

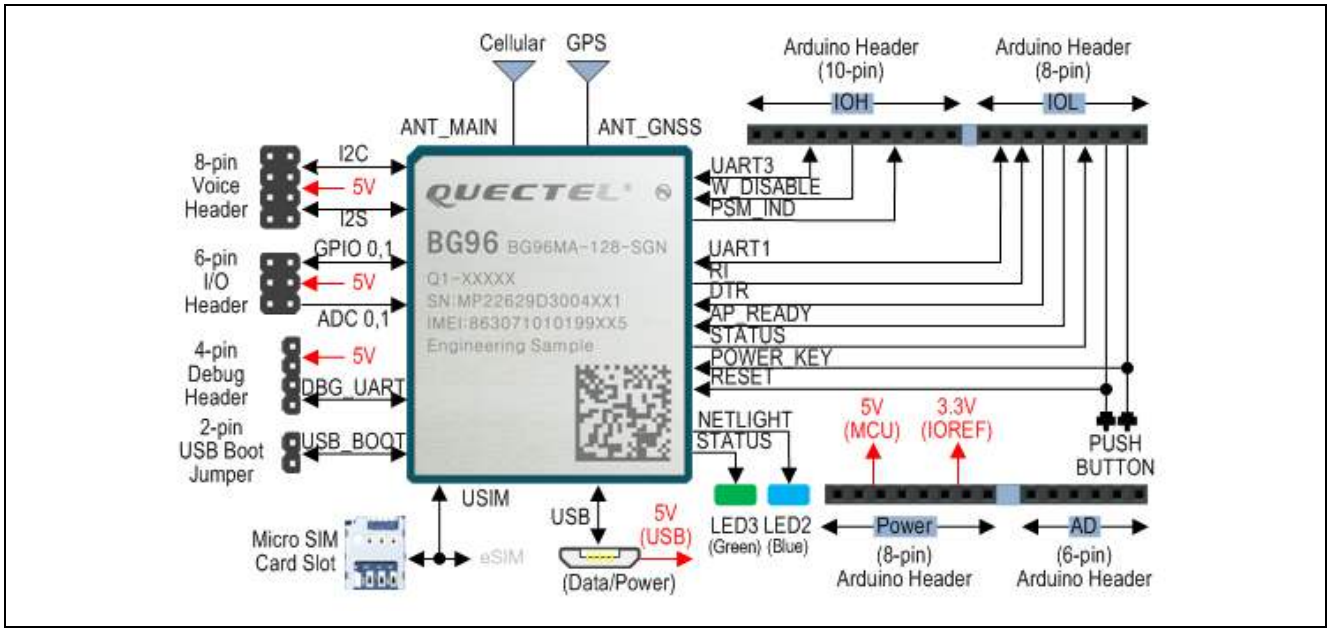

Figure 21 BG96 Module Connections

6.2 Cellular Arduino Shield Connectors, Jumper Settings, and LEDs

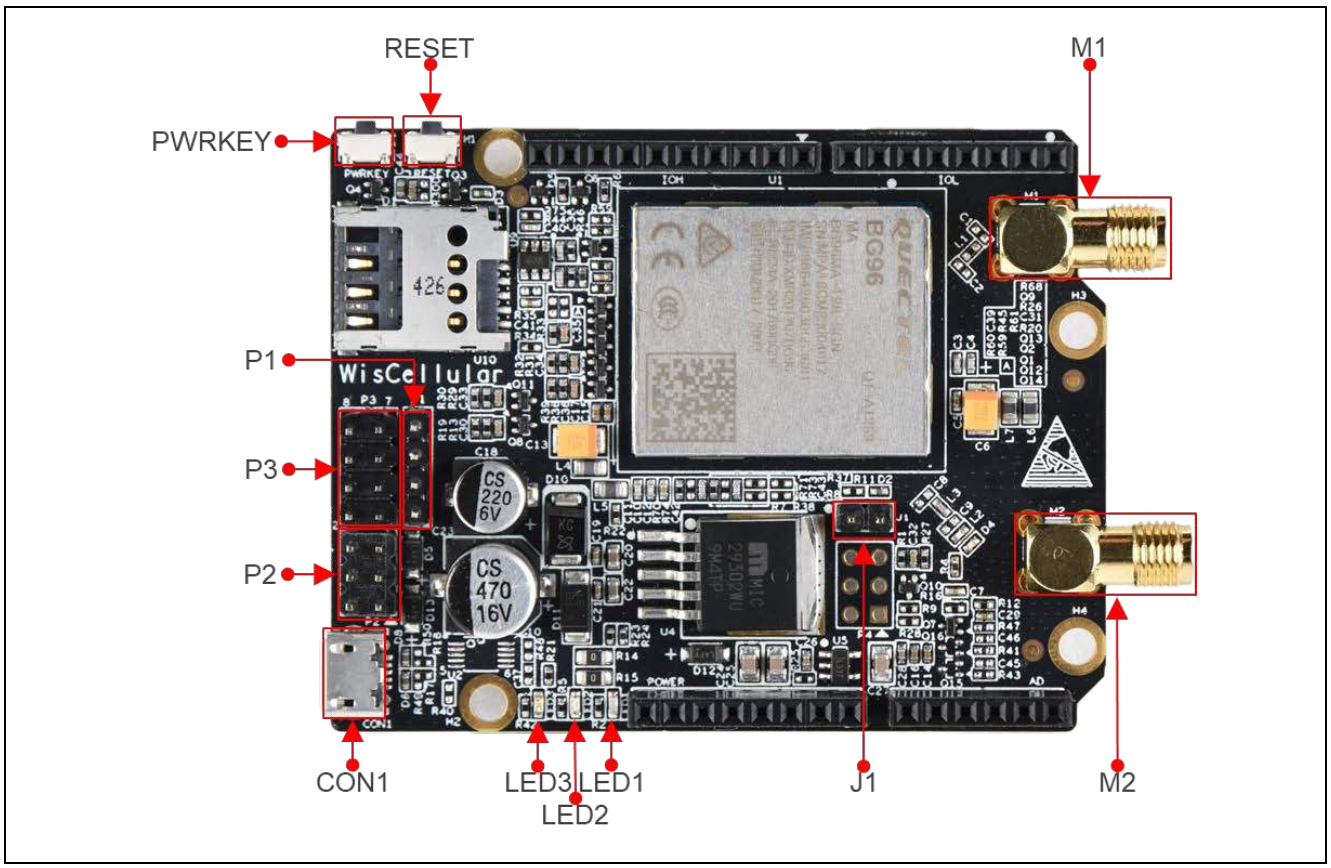

Figure 22 Cellular Arduino Shield Connectors, Jumper Settings, and LEDs

Table 13 Summary of Connectors and Switches

Label	Function	Description
P1	Debug UART interface	Serial port (UART2) interface for debug and log output
P2	Analog Input and Digital I/O interface	2xAnalog input and 2xGPIO
P3	PCM Voice Interface	Interface for an external CODEC board for voice communication
RESET	RST Key	Reset the BG96 module
PWRKEY	Power Key	Turn the BG96 module on/off
CON1	Micro USB	USB Interface for power and control
J1	USB BOOT	Force the BG96 module to boot from USB port for firmware upgrade
M1	Cellular Antenna	SMA connector for cellular antenna
M2	GPS Antenna	SMA connector for GPS antenna

Table 14 P1 – Debug UART Interface

Pin Number	Name	Description
1	VCC_5V	+5V supply voltage
2	DBG_RxD	BG96 Module UART2 RxD
3	DBG_TxD	BG96 Module UART2 TxD
4	GND	GROUND

Table 15 P2 – Analog Input and Digital I/O interface

Pin Number	Name	Description
1	GPIO0	General input/output 0
2	GPIO1	General input/output 1
3	ADC0	Analog input 0
4	ADC1	Analog input 1
5	GND	GROUND
6	VCC_5V	+5V supply voltage

Table 16 P3-PCM Voice Interface

Pin Number	Name	Description
1	I2S_SCL	I2C serial clock
2	I2S_SDA	I2C serial data
3	PCM_SYNC	PCM frame sync output
4	PCM_CLK	PCM clock output
5	PCM_IN	PCM data input
6	PCM_OUT	PCM data output
7	GND	GROUND
8	VCC_5V	+5V supply voltage

On-Board LEDs

The Cellular Arduino Shield provides 3 on-board LEDs to display its working status. Table 17 describes the mapping between the LEDs and the ports that drive them.

Table 17 LED to Port Mapping

LED Number	Color	Designator	Device Port/Pin
1	Red	LED1	Indicate the BG96 module's power status
2	Blue	LED2	Indicate the BG96 module's network activity status
3	Green	LED3	Indicate the BG96 module's network operation status

6.3 Cellular Arduino Shield Arduino-Compatible Expansion Headers

The Cellular Arduino Shield includes Arduino-compatible headers that enable interfacing with S5D9 MCU board. Most of the interface signals are connected directly to the BG96 module pins. This enables direct control of BG96 module depending on the application needs.

The table below shows the mapping between the Arduino headers pins and the BG96 module pins connected to them along with their primary functions.

Table 18 Arduino Header Pins and BG96 Module Pin Primary Functions

Arduino Header Pin Number	Arduino Pin Name	BG96 module Pin	Primary Pin Function
POWER			
1	Vin	N/C	
2	GND	GND	Ground
3	GND	GND	Ground
4	5V		Cellular Arduino Shield power supply (+5V)
5	3.3V	N/C	
6	RESET	N/C	
7	3.3V		Cellular Arduino Shield I/O reference voltage (+3.3V)
8	Reserved	N/C	
AD			
1	AD0	N/C	
2	AD1	N/C	
3	AD2	N/C	
4	AD3	N/C	
5	AD4	N/C	
6	AD5	N/C	
IOL			
1	IO0	PIN 35	UART1_RxD
2	IO1	PIN 34	UART1_TxD
3	IO2	PIN 39	RI
4	IO3	PIN 30	DTR
5	IO4	PIN 19	AP_READY
6	IO5	PIN 16/17	RESET
7	IO6	PIN 15	PWRKEY
8	IO7	PIN 20	RESET
IOH			
1	IO8	PIN 18	W_DISABLE
2	IO9	PIN 1	PSM_IND
3	IO10	N/C	
4	IO11	PIN 28	UART3_RxD
5	IO12	PIN 27	UART3_TxD
6	IO13	N/C	
7	GND	GND	Ground
8	AREF	N/C	
9	SDA	N/C	
10	SCL	N/C	

6.4 Cellular Arduino Shield Schematics

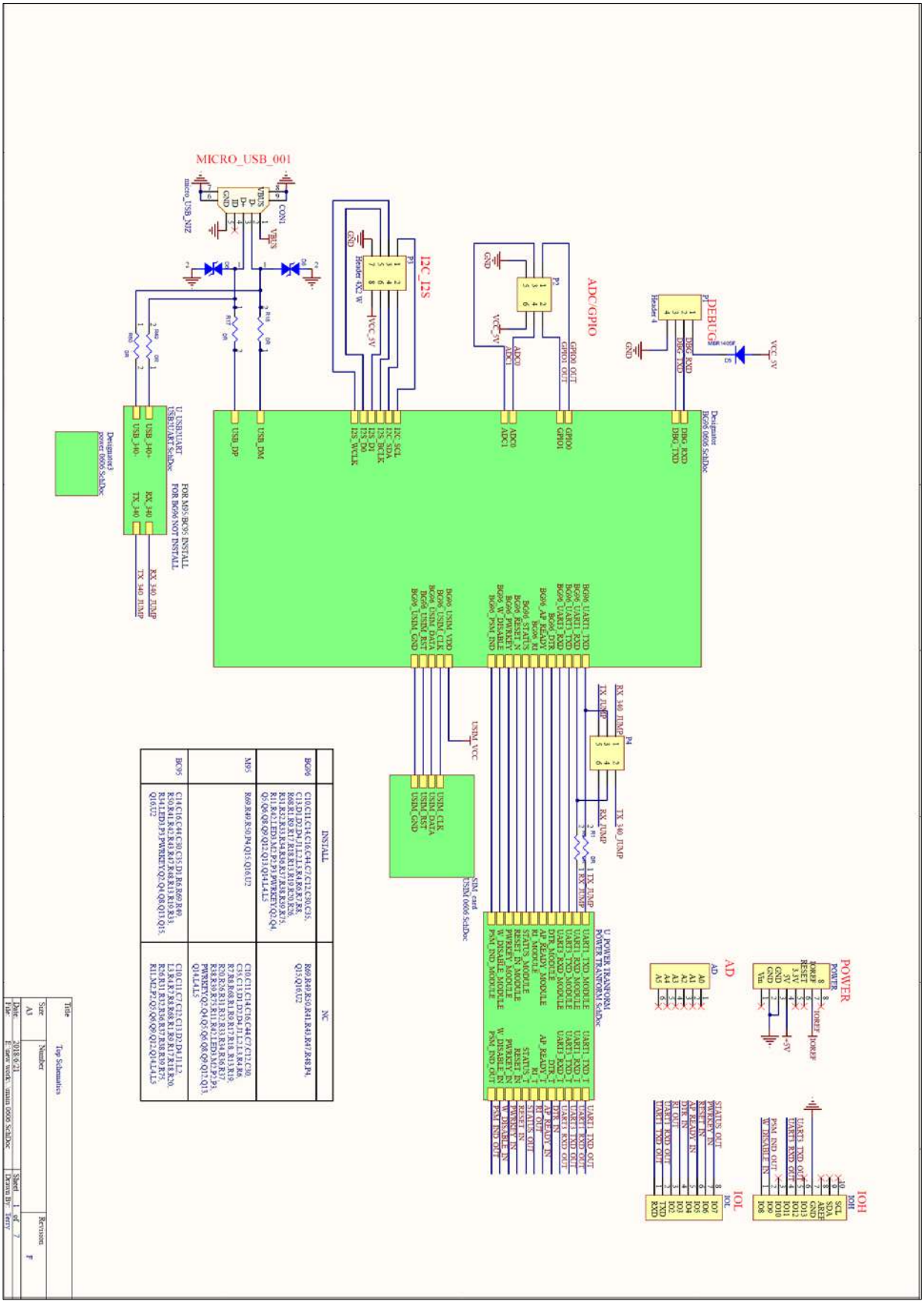

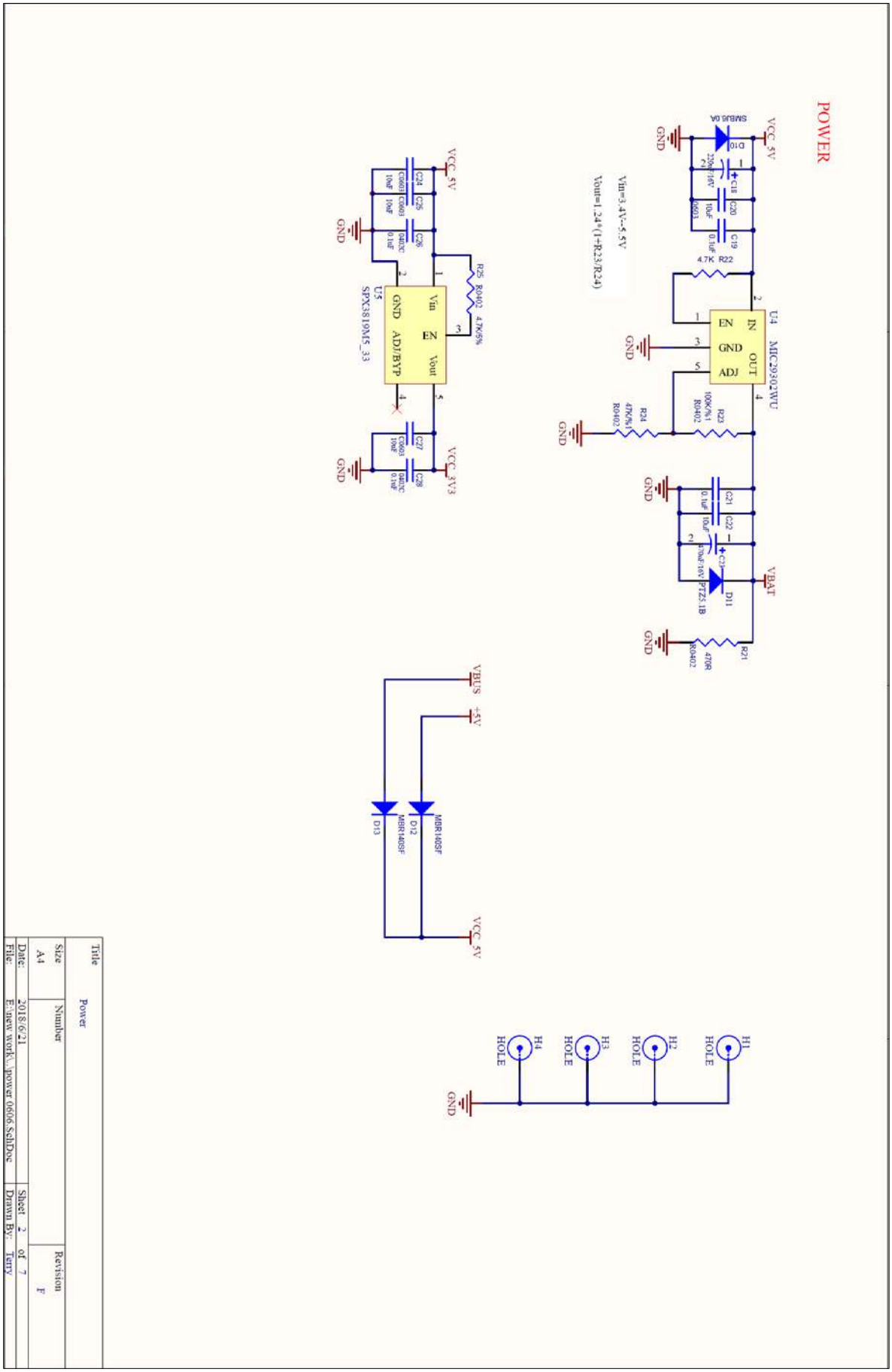
POWER
VCC_5V
GND
SMBJ5.0A
D10
C18
C20
C19
4.7K R22
U4 MIC29302WU
EN
IN
GND
OUT
ADJ
Vin=3.4V~5.5V
Vout=1.24*(1+R23/R24)
R24
R23
C21
C22
C23
D11
PTZ5.1B
VBAT
R21
470R
U5
SPX3819M5_33
Vin
EN
GND
ADJ/BYP
Vout
R25 R0402 4.7K/5%
C24
C25
C26
C27
C28
VCC_3V3
VBUS
+5V
D13
D12
MBR1405F
H1
H2
H3
H4
HOLE
Title
Power
Size
A4
Number
Revision
F
Date:
2018/6/21
File:
E:\new work\...\power 0606.SchDoc
Sheet 2 of 7
Drawn By: Terry

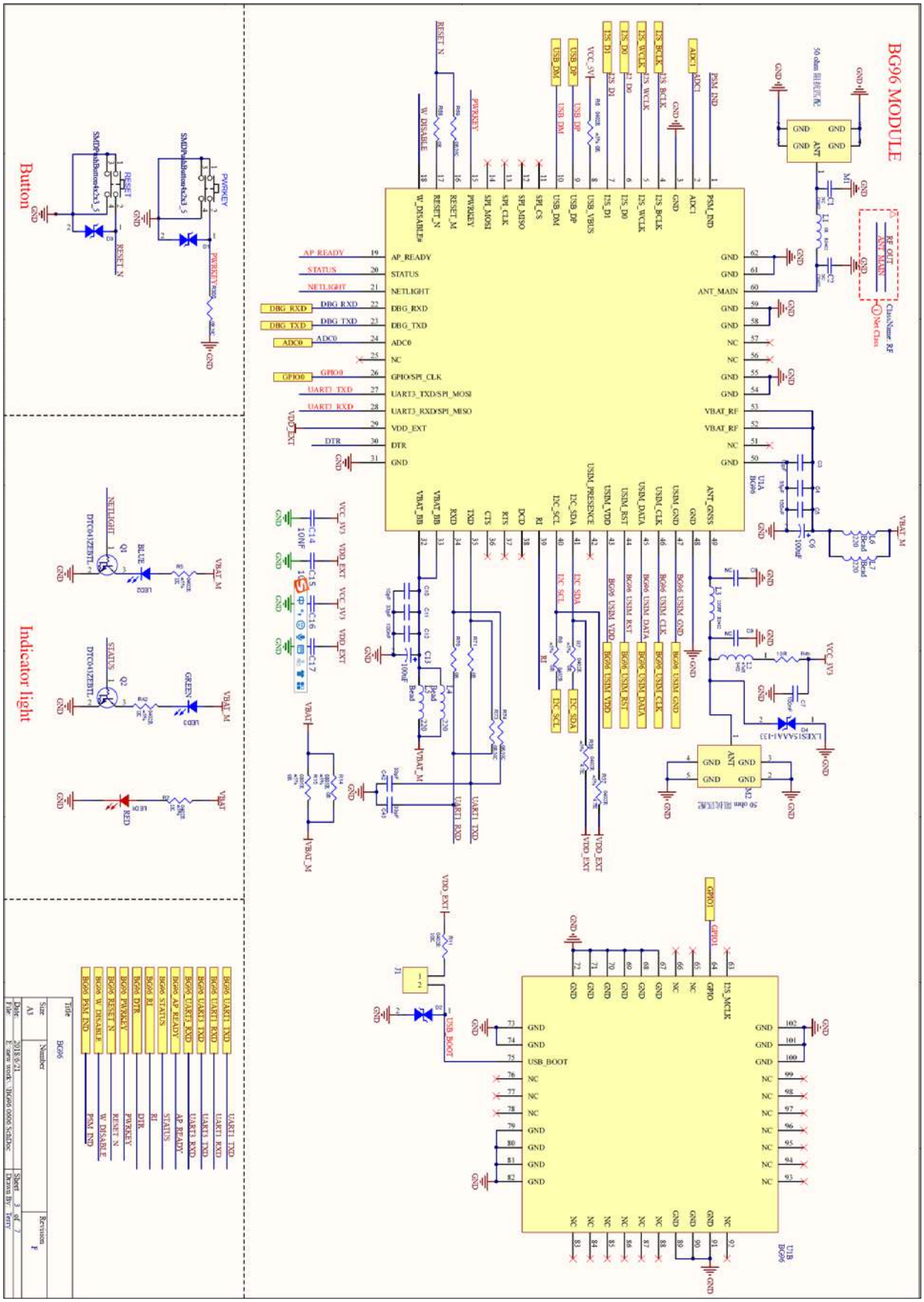
BG96 MODULE
Button
Indicator light
RESET
PWRKEY
LED2
LED3
LED4
BLUE
GREEN
RED
NETLIGHT
STATUS
U1A BG96
U1B BG96
ANT
ANT_MAIN
ANT_GNSS
USB_BOOT
W_DISABLE
RESET_N
PWRKEY
AP_READY
STATUS
NETLIGHT
DBG_RXD
DBG_TXD
ADC0
GPIO0
UART3_TXD/SPI_MOSI
UART3_RXD/SPI_MISO
VDD_EXT
DTR
I2S_MCLK
I2C_SCL
I2C_SDA
USIM_PRESENCE
USIM_RST
USIM_VDD
USIM_DATA
USIM_CLK
USIM_GND
UART1_TXD
UART1_RXD
UART1_CTS
UART1_RTS
UART1_DCD
UART1_RI
SPI_CS
SPI_MISO
SPI_CLK
SPI_MOSI
USB_VBUS
USB_DP
USB_DM
I2S_D1
I2S_D0
I2S_WCLK
I2S_BCLK
PSM_IND
VBAT_RF
VBAT_BB
VBAT_M
VCC_3V3
Title
Size
Number
Revision
Date
File
Sheet
Drawn By:

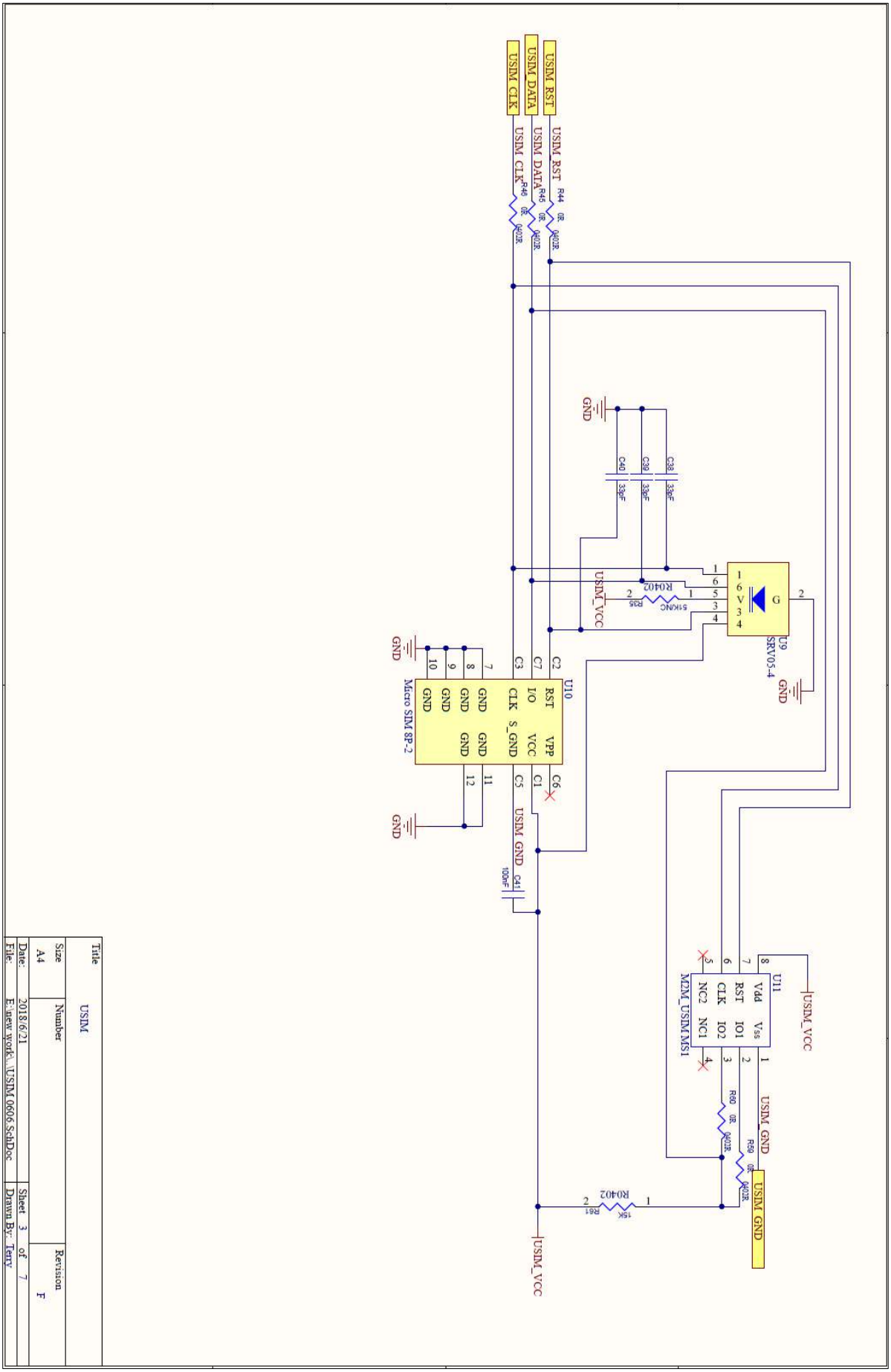
USIM_RST
USIM_DATA
USIM_CLK
R44 0R 0402R
R45 0R 0402R
R46 0R 0402R
GND
C38 33pF
C39 33pF
C40 33pF
USIM_VCC
R0402
R35 51KNC
U9
SRV05-4
U10
Micro SIM 8P-2
RST
I/O
CLK
S_GND
VPP
VCC
GND
C2
C3
C7
C1
C5
C6
USIM_GND
C41 100nF
U11
M2M_USIM MS1
Vdd
RST
CLK
NC2
Vss
IO1
IO2
NC1
R60 0R 0402R
R59 0R 0402R
R61 15K
Title
USIM
Size
A4
Number
Revision
F
Date: 2018/6/21
Sheet 3 of 7
File: E:\new work\...\USIM 0606.SchDoc
Drawn By: Terry

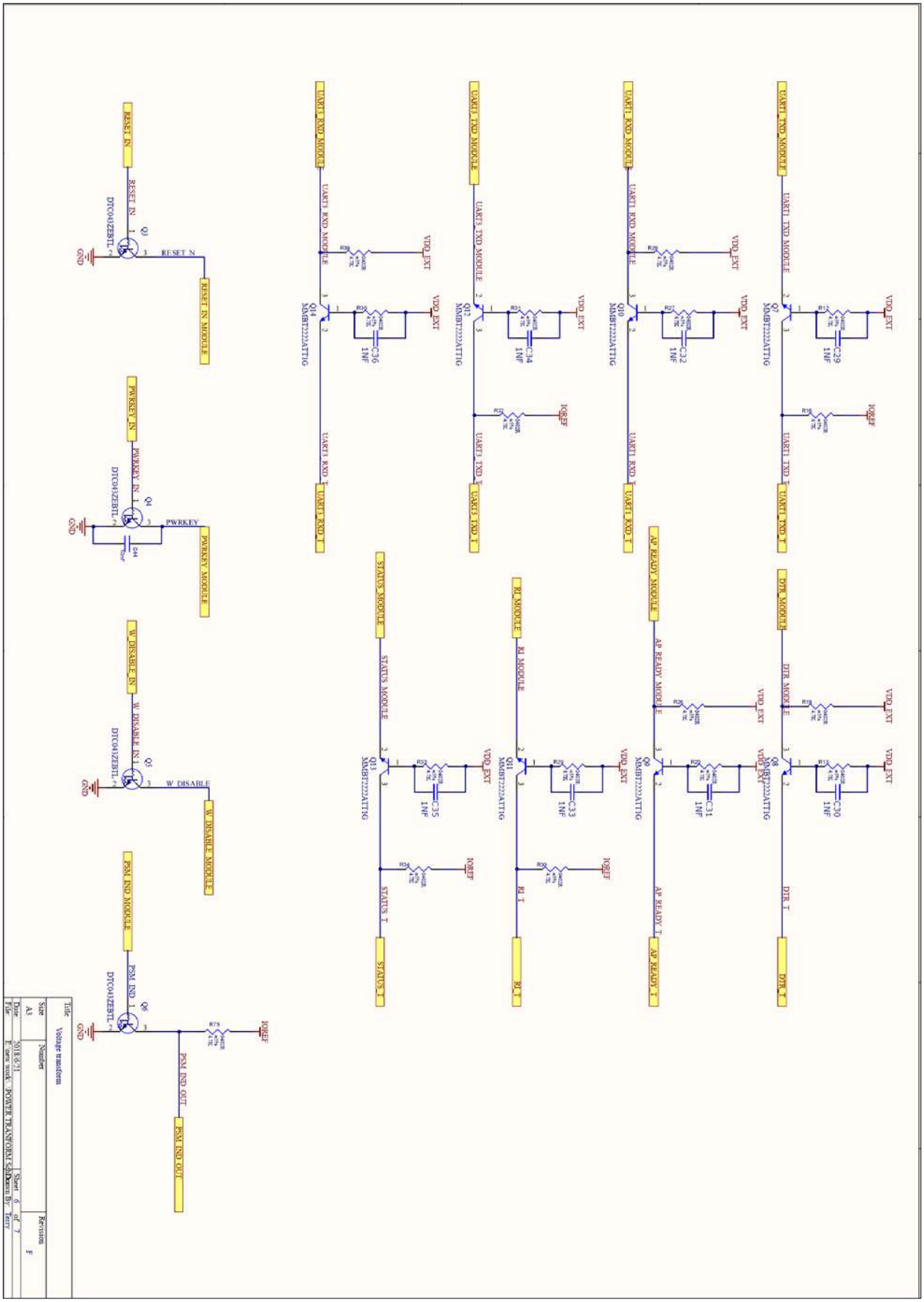
RESET IN
RESET IN MODULE
PWRKEY IN
PWRKEY MODULE
W DISABLE IN
W DISABLE MODULE
PSM IND MODULE
PSM IND OUT
UART3 RXD MODULE
UART3 TXD MODULE
UART1 RXD MODULE
UART1 TXD MODULE
STATUS MODULE
RI MODULE
AP READY MODULE
DTR MODULE
VDD_EXT
IOREF
GND
Title
Voltage transform
Size
A3
Number
Revision
F
Date
2018/6/21
File
E:\new work\POWER TRANFORM Sch
Sheet 6 of 7
Drawn By: Terry

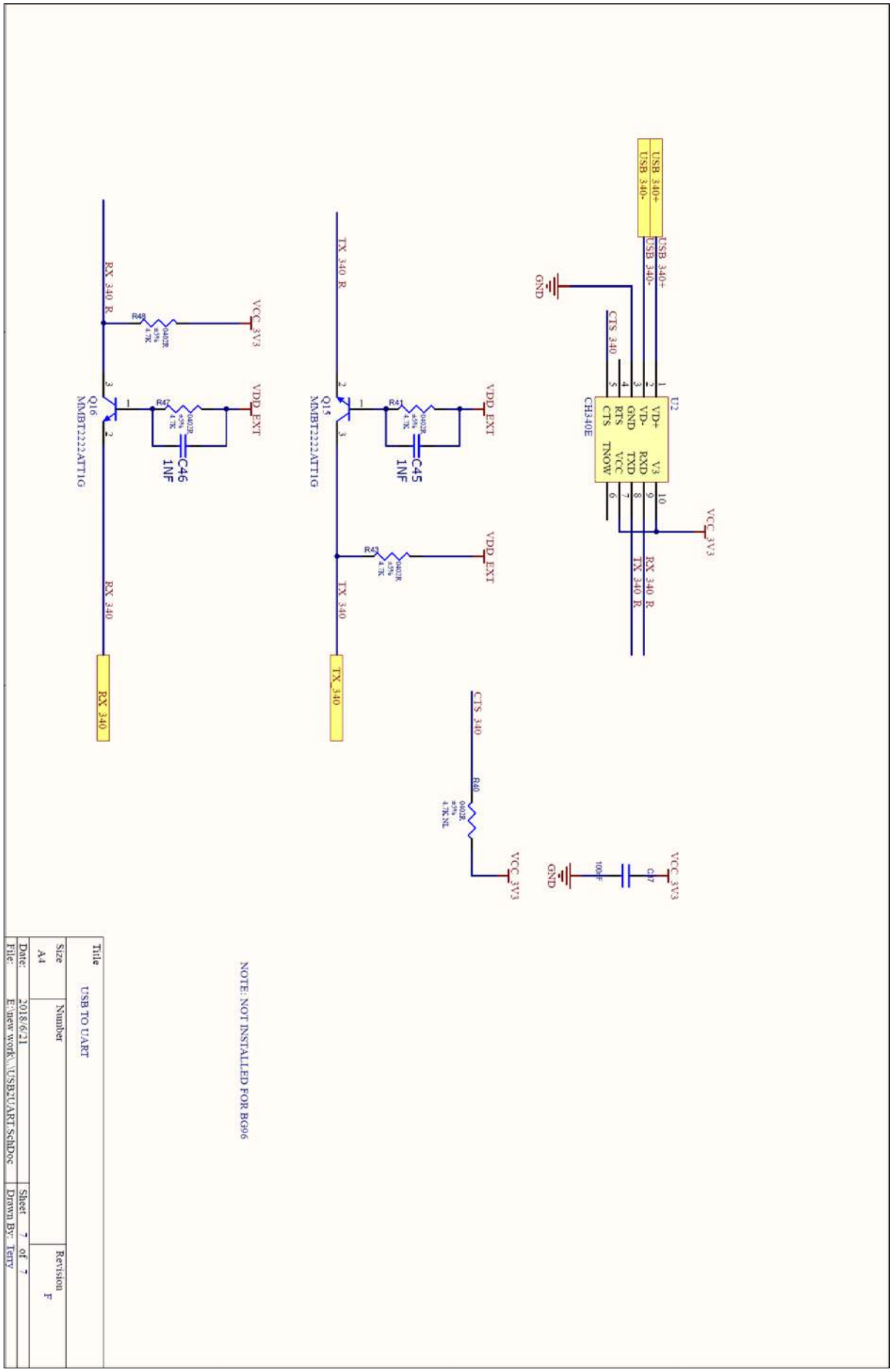
USB 340+
USB 340-
GND
CTS 340
U2
CH340E
VD+
VD-
GND
RTS
CTS
V3
RXD
TXD
VCC
TNOW
VCC_3V3
RX 340 R
TX 340 R
100nF
C47
TX 340 R
Q15
MMBT2222ATT1G
R41
4.7K
VDD_EXT
C45
1NF
R42
TX 340
RX 340 R
Q16
MMBT2222ATT1G
R47
C46
1NF
R48
RX 340
CTS 340
R40
4.7K 1%
NOTE: NOT INSTALLED FOR BG96
Title
USB TO UART
Size
A4
Number
Revision
F
Date:
2018/6/21
Sheet
7
of
7
File:
E:\new work\...\USB2UART.SchDoc
Drawn By:
Terry

6.5 Cellular Arduino Shield Mechanical Dimensions

(All dimensions are in millimeters)

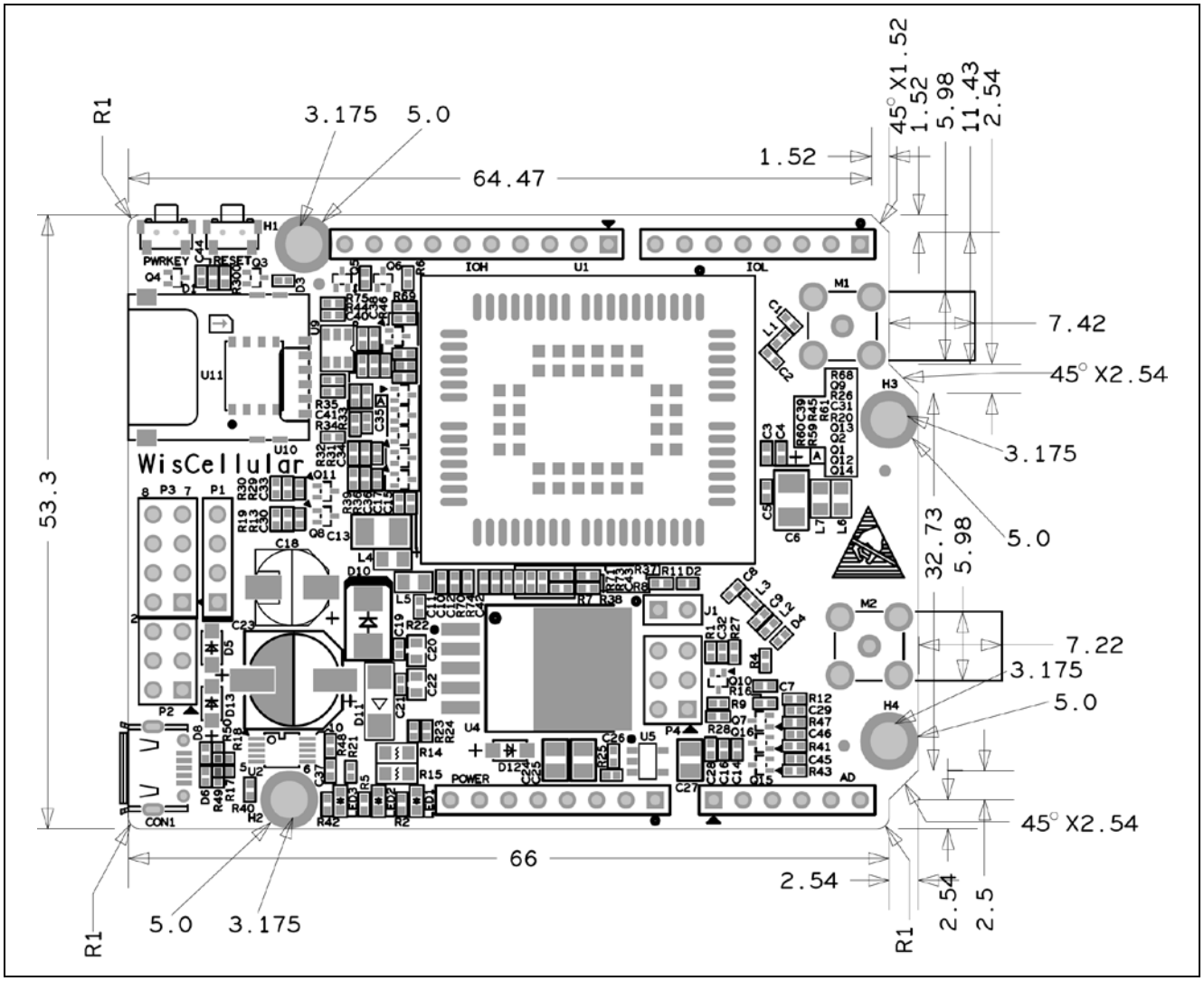

6.6 Cellular Antenna

The cellular antenna for Cellular Arduino Shield is shown Figure 23. It covers working frequency band from 824 MHz to 2690 MHz.

Figure 23 Cellular Antenna for Cellular Arduino Shield

Voltage Standard Wave Ratio (VSWR) plot is shown as follows.

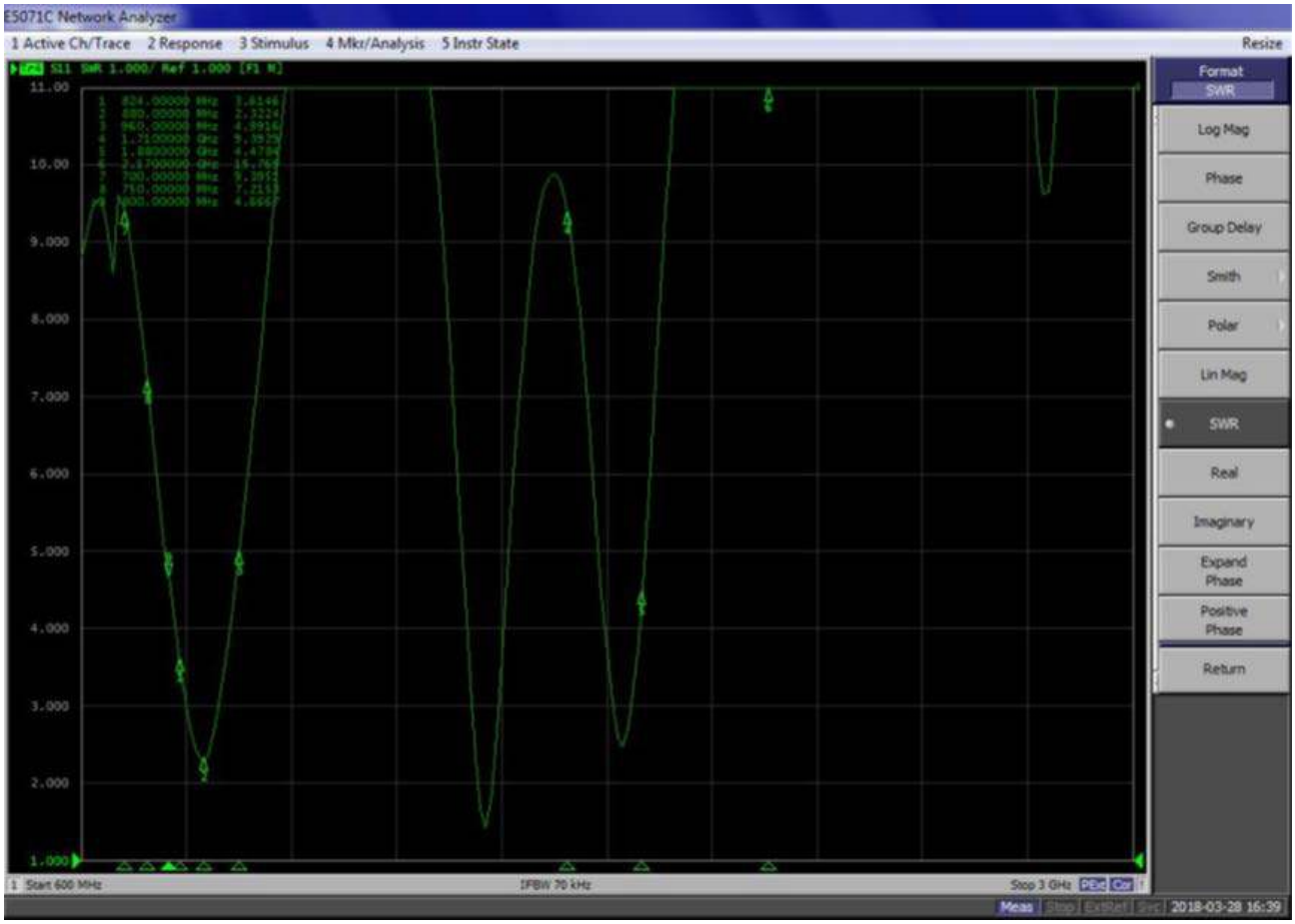

VSWR data is shown in the following table.

Frequency (MHz)	Voltage Standard Wave Ratio (VSWR)
700	9.3
800	4.6
880	3.6
960	4.9
1,710	9.3
1,880	4.4
2,170	15

Smith Plot is shown as follows.

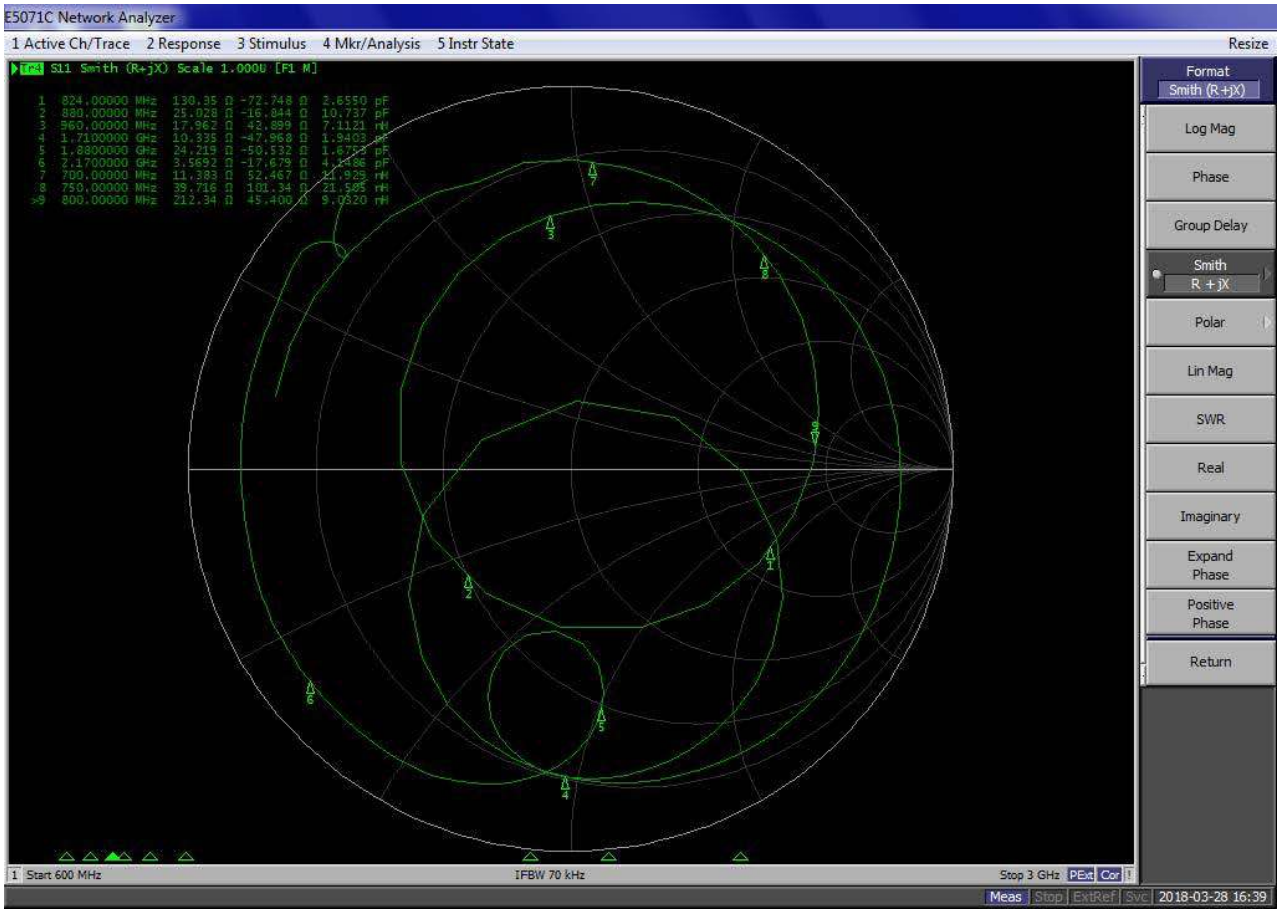

Radiation Pattern H-plane is shown as follows.

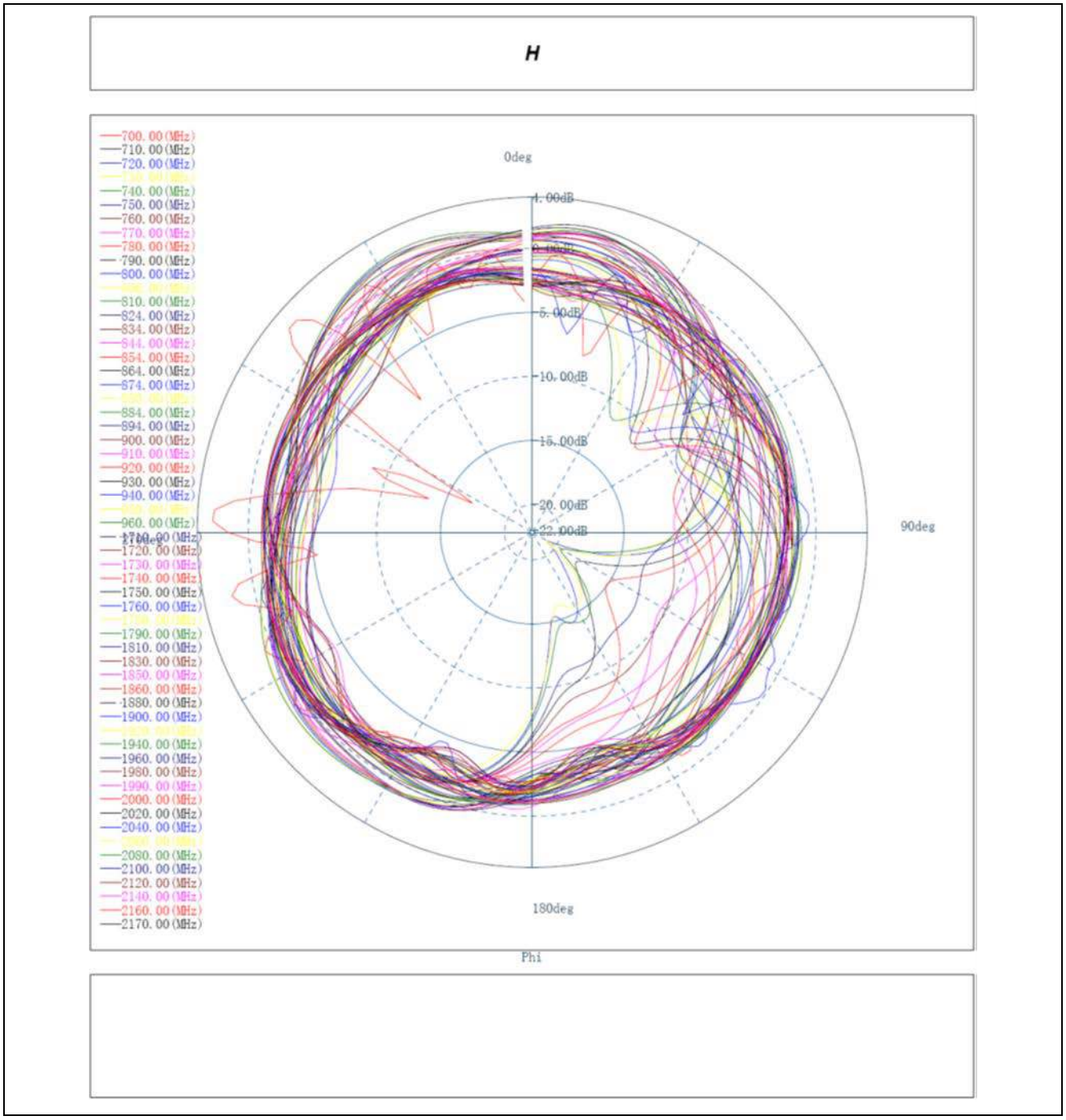

Figure 24 Radiation Pattern H-plane

Radiation Pattern E-plane is shown in the following graphics.

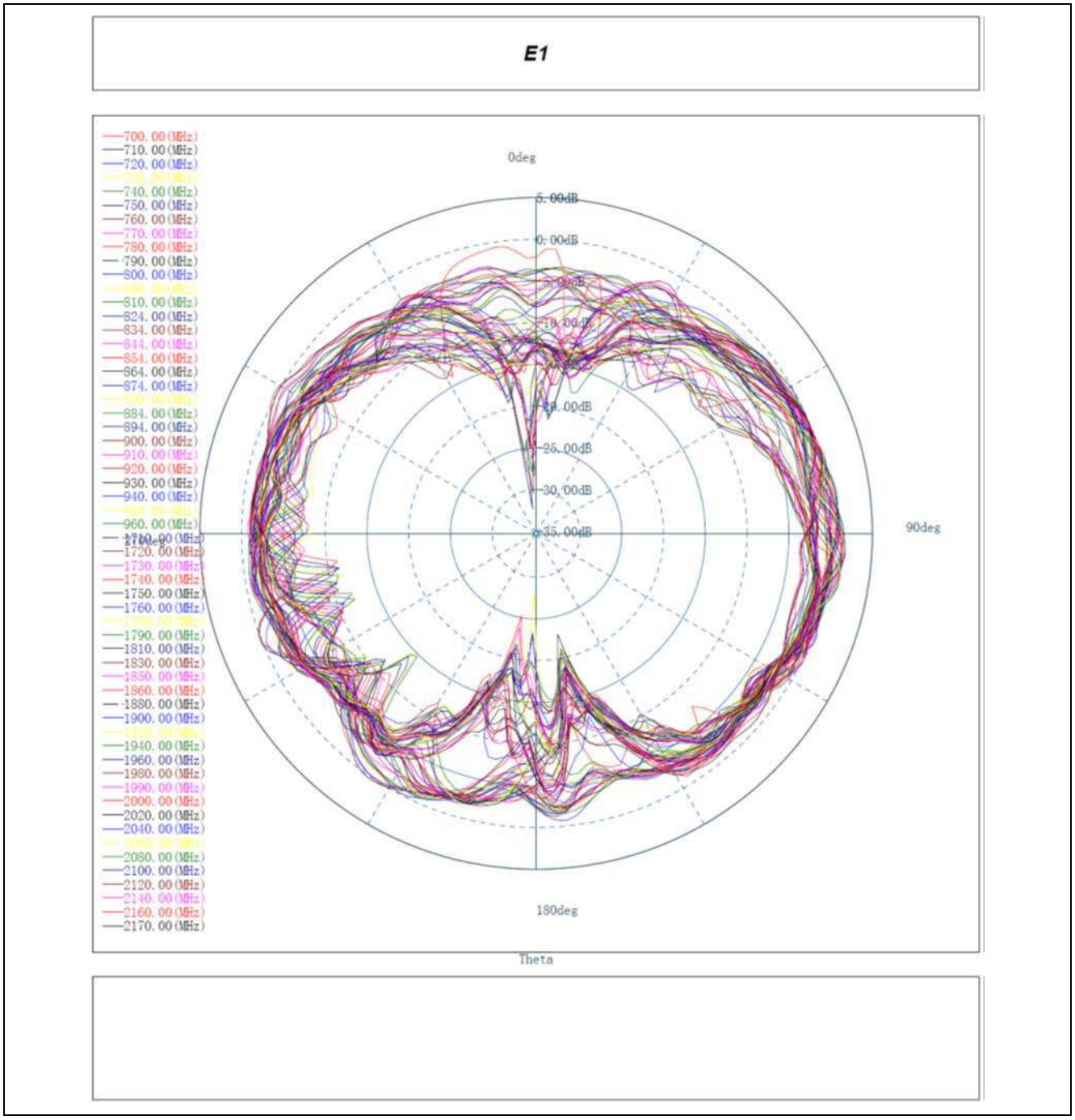

Figure 25 Radiation Pattern E-plane (E1)

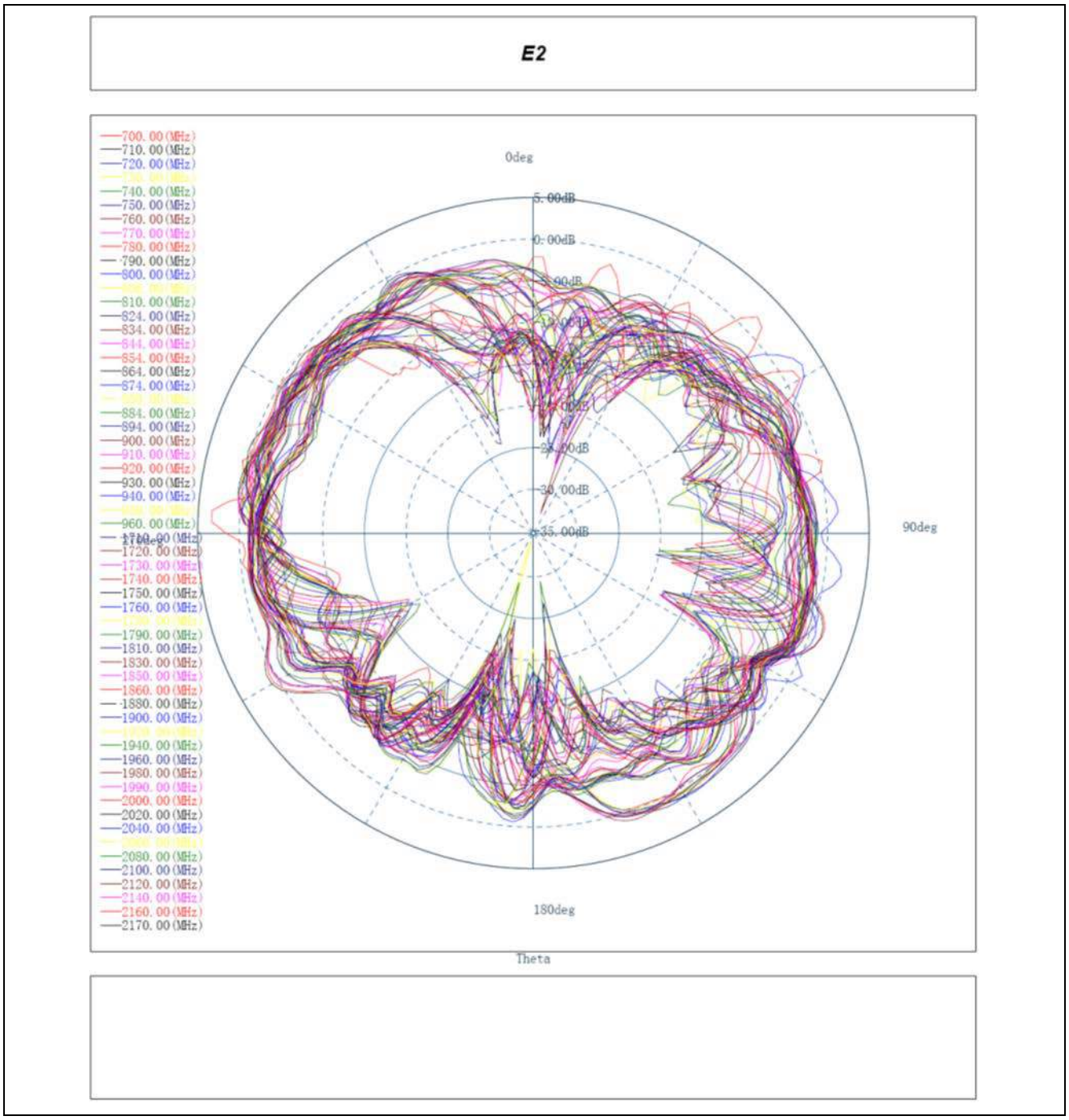

Figure 26 Radiation Pattern E-plane (E2)

UGAIN and Efficiency is listed in the table below

Table 19 Gain and Efficiency at Different Frequencies

Frequency [Hz]	Efficiency	Gain [dBi]
7E+08	49%	1.632948
7.1E+08	51%	1.826395
7.2E+08	49%	1.833288
7.3E+08	44%	1.600659
7.4E+08	46%	1.896142
7.5E+08	50%	1.936788
7.6E+08	50%	1.721112
7.7E+08	46%	1.406281

7.8E+08	45%	1.491829
7.9E+08	47%	1.8309
8E+08	45%	1.843967
8.06E+08	41%	1.714366
8.1E+08	45%	2.215538
8.24E+08	42%	1.97312
8.34E+08	44%	1.890023
8.44E+08	42%	1.407188
8.54E+08	42%	1.453714
8.64E+08	47%	2.111646
8.74E+08	46%	1.93289
8.8E+08	48%	1.960958
8.84E+08	46%	1.930333
8.94E+08	52%	2.347337
9E+08	50%	2.192946
9.1E+08	50%	2.265394
9.2E+08	49%	2.081987
9.3E+08	48%	2.005751
9.4E+08	49%	2.128994
9.5E+08	49%	2.305449
9.6E+08	48%	2.233022
1.71E+09	35%	0.02584
1.72E+09	35%	0.0088
1.73E+09	36%	0.647356
1.74E+09	44%	0.806863
1.75E+09	35%	0.03676
1.76E+09	46%	0.549059
1.78E+09	34%	0.14522
1.79E+09	35%	0.41562
1.81E+09	36%	0.35094
1.83E+09	34%	0.30882
1.85E+09	38%	0.430313
1.86E+09	35%	0.33059
1.88E+09	37%	0.008792
1.9E+09	43%	0.479122
1.92E+09	40%	0.111459
1.94E+09	46%	0.407999
1.96E+09	44%	0.037526
1.98E+09	48%	0.405617
1.99E+09	48%	0.112167
2E+09	47%	0.144104
2.02E+09	46%	0.14634
2.04E+09	47%	0.033818
2.06E+09	45%	0.112366
2.08E+09	51%	0.672779
2.1E+09	48%	0.291807
2.12E+09	54%	0.939911
2.14E+09	54%	1.161325
2.16E+09	59%	1.631935
2.17E+09	59%	1.967355

The cellular antenna mechanical dimensions are shown as follows.

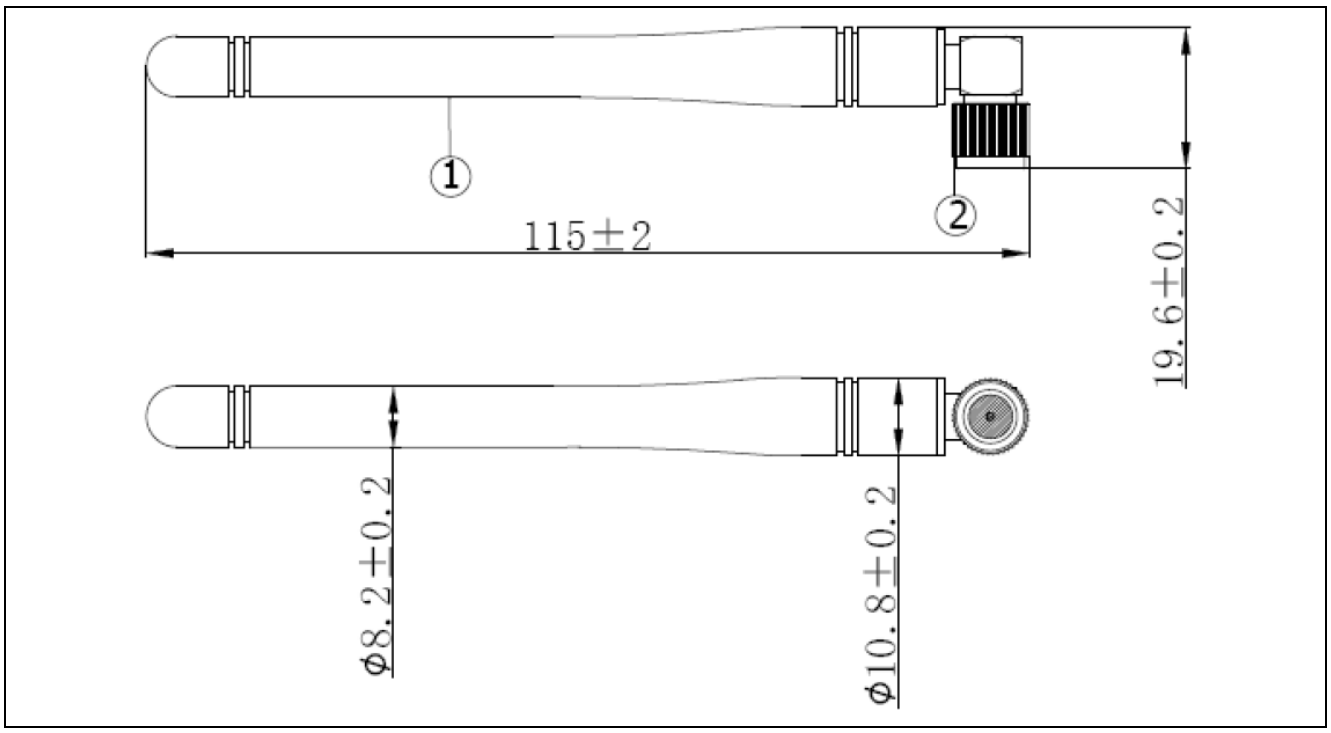

Figure 27 Mechanical Dimensions of the Cellular Antenna

6.7 GPS Antenna

The GPS antenna for Cellular Arduino Shield is shown as follows.

Figure 28 Cellular Arduino Shield GPS Antenna

Antenna specifications are listed in the following table.

Table 20 Antenna Specifications

Item	Specifications	Post Environmental Tolerance
Range of Receiving Frequency	1575.42 ± 1.1	± 2.5
Center Frequency (MHz) (w/ 30mm² GND plane)	1575.42	± 3.0
Bandwidth (MHz) (Return Loss ≤ -10dB)	≥10	± 0.5
VSWR (in Center Frequency)	≤2.0	± 0.5
Gain (Zenith) (dBi Typ) (w/ 70mm² GND Plane)	4.5	± 0.5
Axial Ratio (dB) (w/ 70mm² GND Plane)	3.0	± 0.2
Polarization	Right-Handed Circular	-
Impedance (Ω)	50	-
Frequency Temperature Coefficient (ppm/ºC)	0 ± 10	-

Amplifier Specifications are listed in the following table.

Table 21 Amplifier Specifications

Item	Specifications
Frequency Range	1575.42 MHz
Gain	27 dB
VSWR	≤2.0
Noise Coefficient	≤2.0 dB
DC Voltage	3 to 5V
DC Current	5 ± 2 mA

Environmental test performance specifications are listed in the following table.

Table 22 Environmental Test Performance Specifications

	Normal Temperature	High Temperature[1]	Low Temperature[2]
Amplifier Gain	27 dB ± 2.0	27 dB ± 2.0	27 dB ± 2.0
VSWR	≤ 2.0	≤ 2.0	≤ 2.0
Noise Coefficient	≤ 2.0	≤ 2.0	≤ 2.0

Notes: 1. High temperature test: soap in temperature (85ºC) and humidity (95%) chamber for 24-hour and return to normal temperature (at least for 1-hour) without visual shape change.
2. Low temperature test: soap in temperature (-40ºC) chamber for 24-hour and return to normal temperature (at least for 1-hour) without visual shape change.

The GPS antenna mechanical dimensions are shown in the following figure.

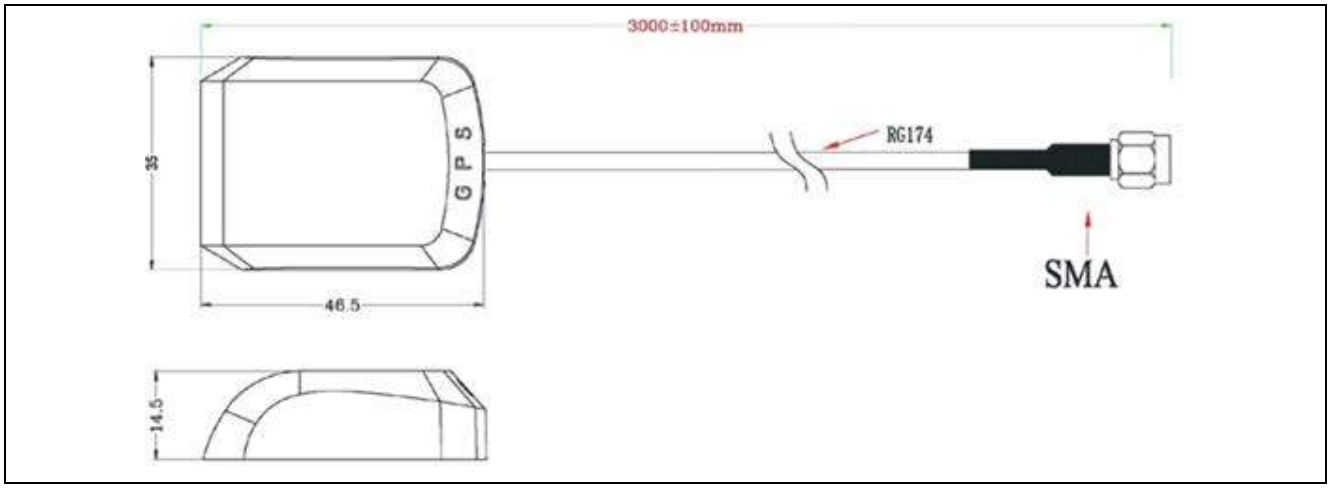

Figure 29 GPS Antenna Mechanical Dimensions

The antenna environmental requirements are listed in the following table.

Table 23 GPS Antenna Environmental Requirements

Conditions	Temperature	Humidity
Working	-35ºC to +80ºC	0% to 95%
Storage	-40ºC to +85ºC	0% to 95%

7. Certifications

AE-CLOUD2 has been certified to comply with the following standards

7.1 CE

Wireless Coverage:

- Wi-Fi: IEEE 802.11n 2.4G single band
- 2G/EGPRS: 900/1800
- 4G/LTE: B1/3/8/20/28

Band	Conducted Power
GSM 900	880MHz - 915MHz @ 35 dBm
DCS 1800	1710MHz - 1785MHz @ 32 dBm
LTE Band 1 Cat-M1& Cat-NB1	1920MHz - 1980MHz @ 25.7 dBm
LTE Band 3 Cat-M1& Cat-NB1	1710MHz - 1785MHz @ 25.7 dBm
LTE Band 8 Cat-M1& Cat-NB1	880MHz - 915MHz @ 25.7 dBm
LTE Band 20 Cat-M1& Cat-NB1	832MHz - 862MHz @ 25.7 dBm
LTE Band 28 Cat-M1& Cat-NB1	703MHz - 748MHz @ 25.7 dBm
802.11b/g/n (HT20/40)	2412MHz - 2472 MHz @ 18.5 dBm

Standard Compliance:

- EN 301 489-1/17/19/52
- EN 55032
- EN 55035
- EN 301511
- EN 301 908-1
- EN 300328
- EN 303 413
- EN 62311
- EN 60950-1

7.2 FCC (no FCC ID required)

Standard Compliance

- FCC part 2/15B

7.3 RoHS

Standard Compliance

- RoHS Directive 2015/863/EU amending Annex II to 2011/65/EU
- IEC 62321-2:2013
- IEC 62631-1:2013
- IEC 62631-3-1:2013
- IEC 62631-5:2013
- IEC 62631-4:2013
- IEC 62631-7-1:2015
- IEC 62631-7-2:2017 & ISO 17075-1:2017
- IEC 62631-6:2015

7.4 WEEE

Standard Compliance

- Directive 2012/19/EU

7.5 Japan MIC

Standard Compliance

- Terminal Equipment (T)
  - Cellular Module: D180034003
  - Wi-Fi Module: D180063003
- Radio Equipment (R)
  - Cellular Module: 003-180062
  - Wi-Fi Module: 018-150012

Website and Support

Visit the following vanity URLs to learn about key elements of the Synergy Platform, download components and related documentation, and get support.

Synergy Software	renesassynergy.com/software
Synergy Software Package	renesassynergy.com/ssp
Software add-ons	renesassynergy.com/addons
Software glossary	renesassynergy.com/softwareglossary
Development tools	renesassynergy.com/tools
Synergy Hardware	renesassynergy.com/hardware
Microcontrollers	renesassynergy.com/mcus
MCU glossary	renesassynergy.com/mcuglossary
Parametric search	renesassynergy.com/parametric
Kits	renesassynergy.com/kits
Synergy Solutions Gallery	renesassynergy.com/solutionsgallery
Partner projects	renesassynergy.com/partnerprojects
Application projects	renesassynergy.com/applicationprojects

Self-service support resources:

Documentation	renesassynergy.com/docs
Knowledgebase	renesassynergy.com/knowledgebase
Forums	renesassynergy.com/forum
Training	renesassynergy.com/training
Videos	renesassynergy.com/videos
Chat and web ticket	renesassynergy.com/support

Revision History

Rev.	Date	Description	
		Page	Summary
1.00	Sep 5, 2018	—	First document release

All trademarks and registered trademarks are the property of their respective owners.

Application Example for Cloud Connectivity (AE-CLOUD2)
User's Manual

Publication Date: Rev.1.00 Sep 5, 2018

Published by: Renesas Electronics Corporation

SALES OFFICES

Renesas Electronics Corporation

http://www.renesas.com

Refer to "http://www.renesas.com/" for the latest and detailed information.

Renesas Electronics America Inc.
1001 Murphy Ranch Road, Milpitas, CA 95035, U.S.A.
Tel: +1-408-432-8888, Fax: +1-408-434-5351

Renesas Electronics Canada Limited
9251 Yonge Street, Suite 8309 Richmond Hill, Ontario Canada L4C 9T3
Tel: +1-905-237-2004

Renesas Electronics Europe Limited
Dukes Meadow, Millboard Road, Bourne End, Buckinghamshire, SL8 5FH, U.K
Tel: +44-1628-651-700

Renesas Electronics Europe GmbH
Arcadiastrasse 10, 40472 Düsseldorf, Germany
Tel: +49-211-6503-0, Fax: +49-211-6503-1327

Renesas Electronics (China) Co., Ltd.
Room 1709 Quantum Plaza, No.27 ZhichunLu, Haidian District, Beijing, 100191 P. R. China
Tel: +86-10-8235-1155, Fax: +86-10-8235-7679

Renesas Electronics (Shanghai) Co., Ltd.
Unit 301, Tower A, Central Towers, 555 Langao Road, Putuo District, Shanghai, 200333 P. R. China
Tel: +86-21-2226-0888, Fax: +86-21-2226-0999

Renesas Electronics Hong Kong Limited
Unit 1601-1611, 16/F., Tower 2, Grand Century Place, 193 Prince Edward Road West, Mongkok, Kowloon, Hong Kong
Tel: +852-2265-6688, Fax: +852 2886-9022

Renesas Electronics Taiwan Co., Ltd.
13F, No. 363, Fu Shing North Road, Taipei 10543, Taiwan
Tel: +886-2-8175-9600, Fax: +886 2-8175-9670

Renesas Electronics Singapore Pte. Ltd.
80 Bendemeer Road, Unit #06-02 Hyflux Innovation Centre, Singapore 339949
Tel: +65-6213-0200, Fax: +65-6213-0300

Renesas Electronics Malaysia Sdn.Bhd.
Unit 1207, Block B, Menara Amcorp, Amcorp Trade Centre, No. 18, Jln Persiaran Barat, 46050 Petaling Jaya, Selangor Darul Ehsan, Malaysia
Tel: +60-3-7955-9390, Fax: +60-3-7955-9510

Renesas Electronics India Pvt. Ltd.
No.777C, 100 Feet Road, HAL 2nd Stage, Indiranagar, Bangalore 560 038, India
Tel: +91-80-67208700, Fax: +91-80-67208777

Renesas Electronics Korea Co., Ltd.
17F, KAMCO Yangjae Tower, 262, Gangnam-daero, Gangnam-gu, Seoul, 06265 Korea
Tel: +82-2-558-3737, Fax: +82-2-558-5338

© 2018 Renesas Electronics Corporation. All rights reserved.

Colophon 5.1

Renesas Synergy™ Platform
Application Example for Cloud Connectivity
(AE-CLOUD2)

Renesas Electronics Corporation

R12UM0033EU0100