| BS,C ,201843,511 | D |
|---|---|

| GEN. ST. | 01 | 02 | 03 | 04 | 05 | 06 | 07 | 08 | 0D | 50 | 60 | 70 | 80 | 90 |
|---|---|---|---|---|---|---|---|---|---|---|---|---|---|---|
| INT. ST. | 10 11 12 13 14 | 18 20 | 31 32 | 33 34 | 38 39 | 40 42 | 43 44 | 45 46 | 48 | 56 70 | 72 73 | 75 76 | 81 82 | 83 84 88 |

| REV. | DATE | DESCRIPTION | BY | C'K'D' |
|---|---|---|---|---|
| A | 2001-09-14 | CONVERSION REVISION 02 | KN | |
| B | 2002-05-28 | EC B20086 | MF | |
| C | 2005-10-28 | 105-0208 | VIVEK | BKP |
| D | 2006-07-10 | 106-0097 | VIVEK | BKP |

## LOADING PATTERN MATING SIDE

| | 01 | 05 | 10 | 15 | 20 | 25 |
|---|---|---|---|---|---|---|
| f | 0 0 0 0 0 0 0 0 0 0 0 0 0 0 0 0 0 0 0 0 0 0 0 0 0 |
| e | 5 4 0 4 6 6 4 0 4 6 6 5 5 6 5 5 5 5 5 5 5 5 5 5 5 |
| d | 5 4 0 4 6 6 4 0 4 6 6 5 5 6 5 5 5 5 5 5 5 5 5 5 5 |
| c | 5 4 0 4 6 6 4 0 4 6 6 5 5 6 5 5 5 5 5 5 5 5 5 5 5 |
| b | 5 4 0 4 5 5 4 0 4 5 5 5 5 5 5 5 5 5 5 5 5 5 5 5 5 |
| a | 5 4 0 4 6 6 4 0 4 6 6 5 5 6 5 5 5 5 5 5 5 5 5 5 5 |
| z | 0 0 0 0 0 0 0 0 0 0 0 0 0 0 0 0 0 0 0 0 0 0 0 0 0 |

POS

SHEET NR. : 38

## LOADED CONNECTOR ASSEMBLY
(FOR EXAMPLE)

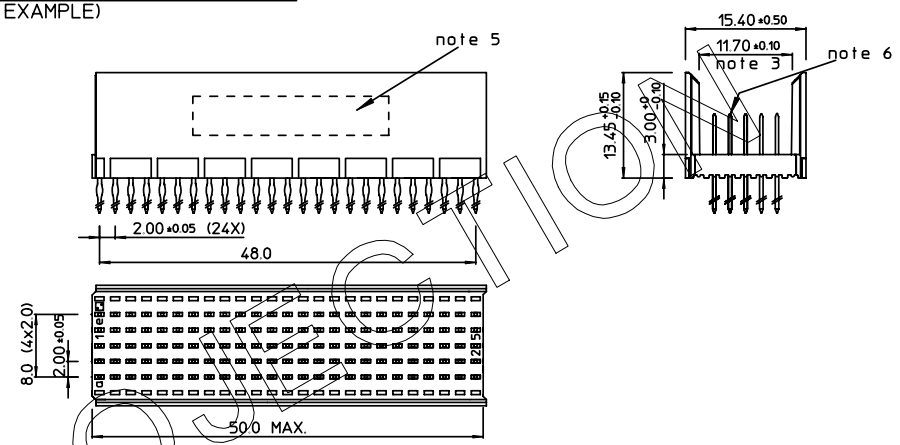


## CONTACT OVERVIEW

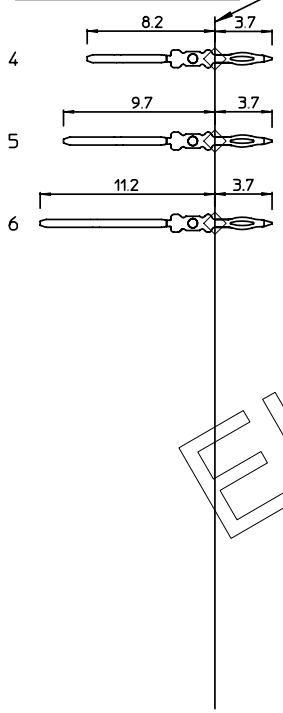


## LAY-OUT P.C.B.-HOLE

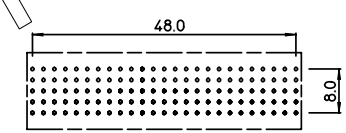


HM2P08PDE150 - -

LEAD FREE INDICATOR : LF = LEAD FREE
(DIGIT 15 & 16)

PLATING CODE (DIGIT 13 AND 14)
(REF DWG No. BS,C ,201844,003)

NOTES:

1. THIS PRODUCT IS CSA APPROVED.
2. THIS PRODUCT IS UL RECOGNIZED.
3. MEASURED AT THE BOTTOM.
4. MATERIAL CONTACT: PHOSPHORBRONZE
   HOUSING: CREAM WHITE GLASSFILLED POLYESTER UL-94V0
5. CONNECTOR PRINTED WITH P/N AND DATE CODE.
6. FOR ACTUAL CONTACT LOADINGS, SEE LOADING PATTERN MATING SIDE.
7. SHAPE OF CONNECTOR HOUSING CAN ALTER DEPENDING ON PRODUCTION LOCATION.
8. THE PRODUCT (LF) MEETS EUROPEAN UNION DIRECTIVES AND OTHER COUNTRY REGULATIONS AS DESCRIBED IN GS-22-008
9. FOR RECOMMENDED PTH DIMENSIONS REFER DRAWING : BS,A ,201572,001

EUROPEAN PROJECTION

| 1DEC ±0,2<br>2DEC ±0,1<br>ANGLES ±1° | APPR. | DATE | SIGN. | LOADING PATTERN OVERVIEW |
|---|---|---|---|---|
| | DRAFT | 1998-04-27 | M.Frel | CAT. No. HM2P08PDE150---- |
| | CHECKED | | | |
| WE RESERVE THE RIGHT TO CHANGE DIMENSIONS OR REQUIREMENTS WITHOUT PRIOR NOTICE. | PROD. MGR. | | | FCI www.fciconnect.com SCALE |
| | PR.ENG.MGR. | | | |
| ALL DIMENSIONS IN MM | PR.MGT.MGR. | | | |
| | REFERENCES | | | BS,C ,201843,511 D |
| | | | | DRAWING No. CUSTOMER DRAWING REVISION |

THIS IS OUR EXCLUSIVE PROPERTY. IT IS NOT TO BE COPIED, REPRINTED OR DISCLOSED TO A THIRD PARTY, NOR USED FOR MANUFACTURING WITHOUT OUR WRITTEN CONSENT, AND HAS TO BE RETURNED TO US IN CASE OF NO USAGE

DIT IS ONZE EIGENDOM EN MAG NOCH NAGEMAAKT, HERDRUKT, OVERGEMAAKT AAN DERDEN, NOCH VOOR FABRIKATIE GEBRUIKT WORDEN, ZONDER ONZE SCHRIFTELIJKE TOELATING. BIJ NIET GEBRUIK IS TERUGZENDING VERPLICHT.