THIS DRAWING IS UNPUBLISHED. RELEASED FOR PUBLICATION -.- .
© COPYRIGHT - By - ALL RIGHTS RESERVED.

REVISIONS					
P	LTR	DESCRIPTION	DATE	DWN	APVD
	N	REVISED PER ECO-16-001548	08MAR2016	AP	DG

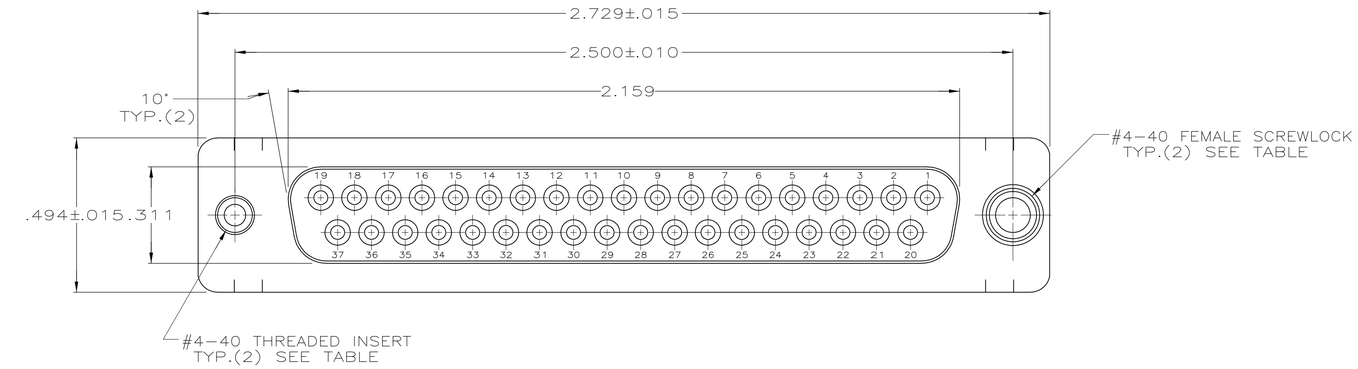

1. HOUSING: FLAME RETARDANT 94V-O RATED THERMOPLASTIC; COLOR: BLACK.
2. SHELL: CARBON STEEL.
3. CONTACTS: PHOS. BRONZE.
4. INSERTS & BOARDLOCKS: BRASS SCREWLOCKS: ZINC.
5. NOTE DELETED.
6. SHELL: .000200 MIN TIN OVER .000100 MIN COPPER.
7. INSERTS: UNPLATED, SCREWLOCKS: UNPLATED, BOARDLOCKS: TIN OVER COPPER.
8. CONTACTS: GOLD FLASH FOR LENGTH OF .100 MIN FROM MATING END, .000100-.000200 BRIGHT TIN OR BRIGHT TIN LEAD ON TERMINATION END, ALL OVER .000050 NICKEL ON ENTIRE CONTACT.
9. CONTACTS: .000030 GOLD FOR LENGTH OF .100 MIN FROM MATING END, .000100-.000200 BRIGHT TIN OR BRIGHT TIN LEAD ON TERMINATION END, ALL OVER .000050 NICKEL ON ENTIRE CONTACT.
10. NOTE DELETED.
11. DATUMS AND BASIC DIMENSIONS ESTABLISHED BY CUSTOMER.
12. RECOMMENDED SCREWLOCK IS 5747877-3 WITH RETENTION INSERTS.
13. .110 MAX IN SHELL TAB CLINCH AREAS.

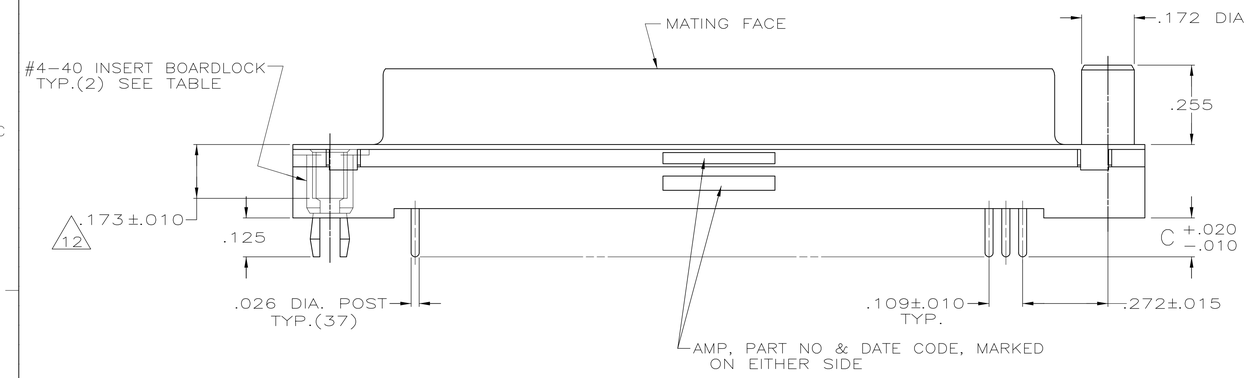

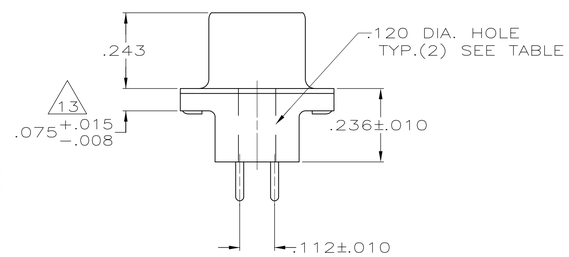

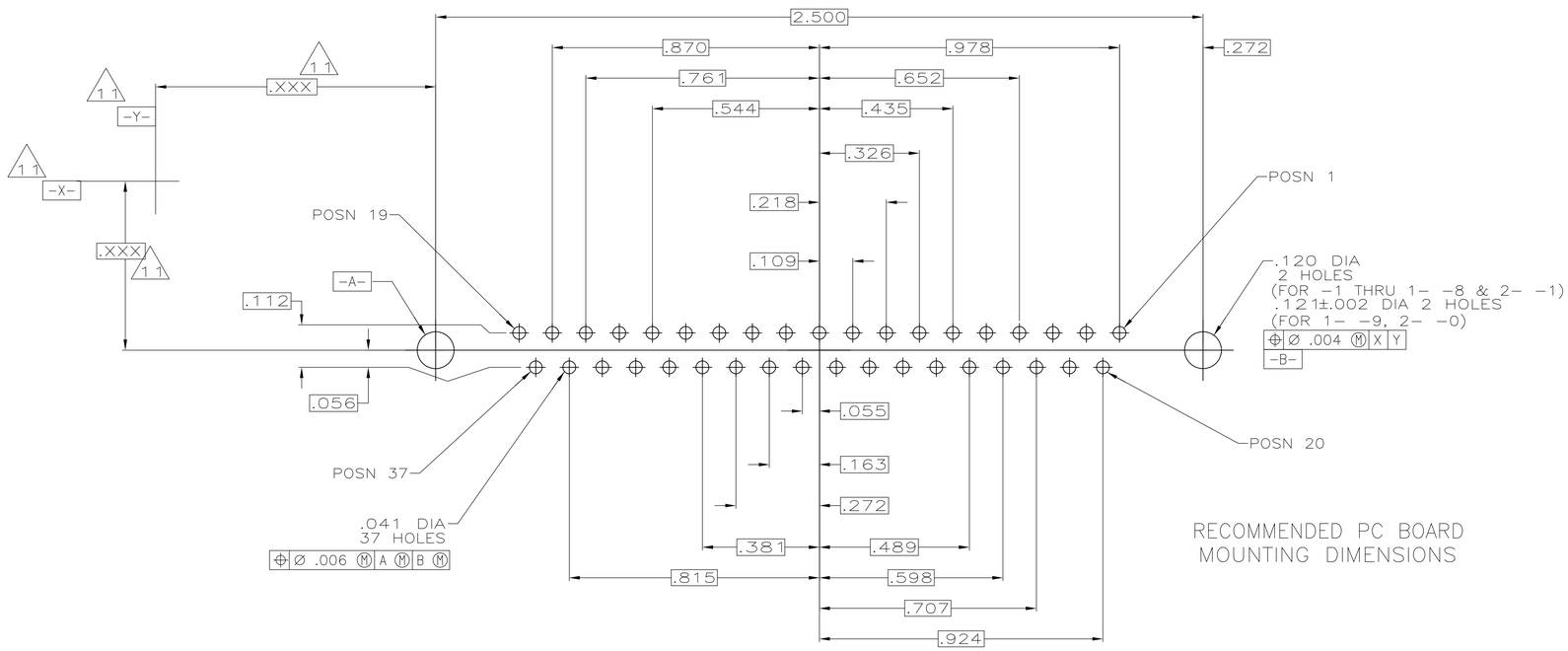

RECOMMENDED PC BOARD MOUNTING DIMENSIONS

	REMARKS	CONTACT FINISH	C	PART NUMBER
SUPERSEDED BY 1-747301-6	WITH FEMALE SCREWLOCKS	9	.170	2-747709-1
	WITH INSERT BOARDLOCKS	9	.125	2-747709-0
SUPERSEDED BY 2-747709-0		8	.125	1-747709-9
OBSOLETE	WITH FEMALE SCREWLOCKS	9	.250	1-747709-8
OBSOLETE		8	.250	1-747709-7
SUPERSEDED BY 1-747301-6		9	.170	1-747709-6
OBSOLETE		8	.170	1-747709-5
OBSOLETE		9	.125	1-747709-4
OBSOLETE		8	.125	1-747709-3
OBSOLETE	WITH THREADED INSERTS	9	.250	1-747709-2
OBSOLETE		8	.250	1-747709-1
OBSOLETE		9	.170	1-747709-0
OBSOLETE		8	.170	747709-9
SUPERSEDED BY 747301-8		9	.125	747709-8
SUPERSEDED BY 747301-7		8	.125	747709-7
OBSOLETE	WITH .120 DIA. HOLE	9	.250	747709-6
OBSOLETE		8	.250	747709-5
OBSOLETE		9	.170	747709-4
OBSOLETE		8	.170	747709-3
OBSOLETE		9	.125	747709-2
OBSOLETE		8	.125	747709-1

THIS DRAWING IS A CONTROLLED DOCUMENT.

DIMENSIONS: INCHES

TOLERANCES UNLESS OTHERWISE SPECIFIED:
0 PLC ± -
1 PLC ± -
2 PLC ± -
3 PLC ± .005
4 PLC ± -
ANGLES ± -

MATERIAL 1 - 2 - 3 4
FINISH 6 - 7 - 8 9

DWN S. WELDON 2-27-85
CHK J. GERACE 2-27-85
APVD R.BAER/R.BRANDT 2-27-85

TE Connectivity

NAME: RECEPTACLE ASSEMBLY, SIZE 4, 37 POS., VERTICAL, .026 DIA. DUPLEX PLATED POSTS, FRONT SHELL, AMPLIMITE

PRODUCT SPEC 108-40025
APPLICATION SPEC 114-40023
WEIGHT —

SIZE A1 | CAGE CODE 00779 | DRAWING NO C-747709 | RESTRICTED TO —

CUSTOMER DRAWING | SCALE NTS | SHEET 1 OF 1 | REV N

4805 (1/15)