THIS DRAWING CONTAINS INFORMATION THAT IS PROPRIETARY TO J.S.T. AND SHALL NOT BE USED OR SHOWN WITHOUT WRITTEN PERMISSION.

ITEM	QTY.	PART NO.	DESCRIPTION
1	4	14KR-6S-P	KR CONNECTOR
2	1,708 mm	UL1061, 26AWG	BLUE
3	2	KRWH-28C-H	GRAY

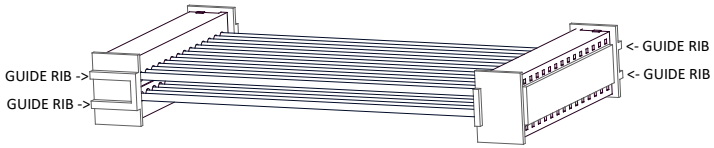

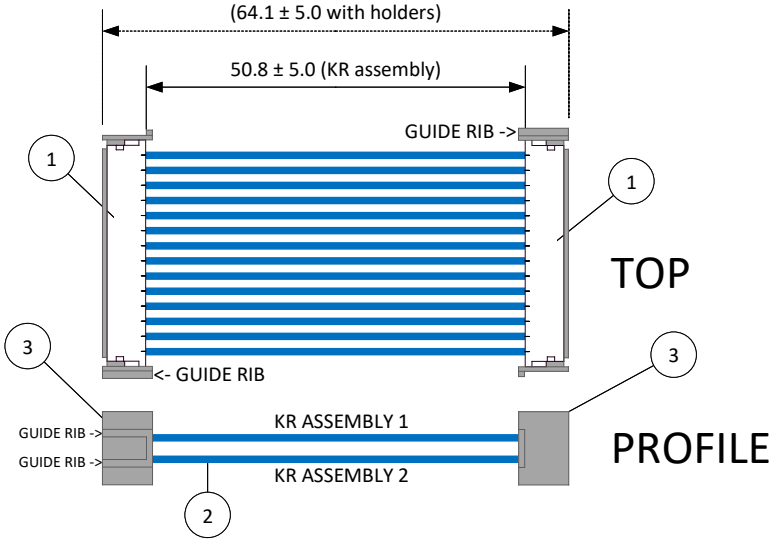

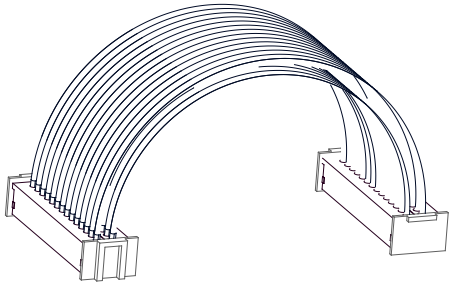

REV.	DESCRIPTION	DATE	BY

DIMENSIONS: All dimensions are in MM with a tolerance of +/- 5.0 unless otherwise specified.	SCALE: 1: 1	Electrical Specifications: Current: 1.0A AC/DC; Voltage: 100V AC/DC
	DESCRIPTION: 2.0 mm Pitch KRW Catalog Standard Assembly - 2" Inside Length	
DRAWN BY: STEVEN PILKINGTON	ASSEMBLY PART NO.: A28KRW28KRW26E51C	
CHECKED BY: CHELSEA COLE	DRAWING NO.: GAM-1071	DATE: 10/28/2021