This information is confidential and is disclosed to you on condition that no further disclosure is made by you to other than T & B Personnel without written authorization from
THOMAS & BETTS INTERNATIONAL

NUMBER A2

T&B

FLEXSTRIP* JUMPERS

2/86

†CONDUCTOR PITCH "A"			MARGIN C (min.)		THICKNESS D (MAX.)		PIN DIAMETER E ±0,025 (±.001")		NUMBER OF CONDUCTORS	
Cat.Ref.	mm	(inch)	mm	(inch.)	mm	(inch.)	mm	(inch.)	min.	max.
1	1,27	.050"	0,25	.010"	0,64	.025"	0,320	.0126"	2 -	30
6	1,90	.075"	0,38	.015"	0,84	.033"	0,404	.0159"	2 -	30
2	2,54	.100"	0,51	.020"	0,84	.033"	0,511	.0201"	2 -	30
3	3,18	.125"	1,52	.060"	0,84	.033"	0,511	.0201"	2 -	25
4	3,81	.150"	1,52	.060"	0,84	.033"	0,511	.0201"	2 -	20
5	5,08	.200"	1,52	.060"	0,84	.033"	0,511	.0201"	2 -	15

Dimensions are shown in mm (inches.)
† Tolerance on Pitch ±0,25 (0.01") non-cumulative.

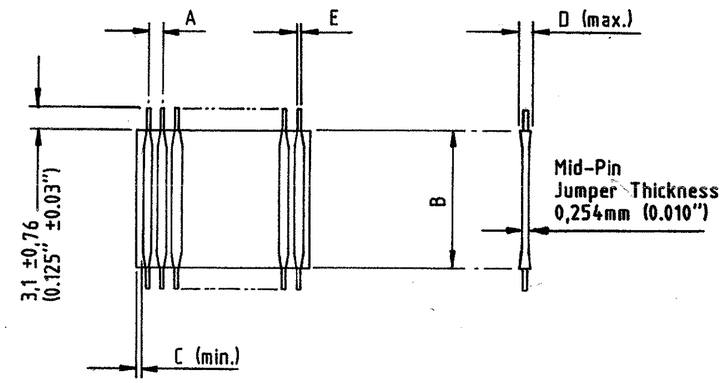

INSULATION LENGTH B ±1.57 (±0.062")		
mm	(inch)	Cat. Ref.
25.4	1	1
38.1	1½	1.5
50.8	2	2
63.5	2½	2.5
76.2	3	3
88.9	3½	3.5
101.6	4	4
114.3	4½	4.5
127	5	5
139.7	5½	5.5
152.4	6	6

PROPERTIES :-

Insulation Material - Nomex#
Temperature Rating - 105°C
Current Rating - 2 amps
U.L. Style Number - 5188

NOTES:-

*Trademark of Thomas & Betts Corporation
Registered trademark of E.I. Du Pont de Nemours

CATALOGUE NUMBERING SYSTEM

FSN-XXA-X

- Product Code
- Conductor Pitch (see table for ref' N°)
- Insulation Length (see table for ref' N°)
- Straight Pin
- Number of Conductors (see table for max' number)

EXAMPLE:-

FSN -22A - 15

FSN - Flexstrip Jumper With Nomex Insulation
2 - Conductor Pitch 2.54 (0.100)
2 - Insulation Length 50.8 (2)
A - Straight Pin
15 - Number of Conductors 15

THOMAS & BETTS INTERNATIONAL
EUROPEAN ENGINEERING DIVISION

DRG. N° 3S-10018

33

REV	DESCRIPTION	DATE	BY
0			

MATERIAL
HEAT TREAT
FINISH
SCALE
DR.
CH.
APP.
PART NAME
PRODUCT CODE
TOLERANCES UNLESS OTHERWISE SPECIFIED

FSN- 11.5A-12.
=

tyco Electronics 1437129-7 REV 0 SHT 1 OF 1

IMPERIAL DIMENSIONS SHOWN THUS [ ]
TOLERANCES
·0000 EQUALS ± ·0002
·000 EQUALS ± ·003
·00 EQUALS ± ·015

THIRD ANGLE PROJECTION