THIS DRAWING IS UNPUBLISHED. RELEASED FOR PUBLICATION -,- .
© COPYRIGHT - BY TYCO ELECTRONICS CORPORATION. ALL RIGHTS RESERVED.

LOC	DIST
AF	50

REVISIONS

P	LTR	DESCRIPTION	DATE	DWN	APVD
	J	REVISED PER ECR-06-010427	31AUG06	HMR	KR

1 CONTINUOUS STRIP ON REELS WITH TERMINALS LOCATED ON 8.38±0.08[.330±.003] CENTERS.

2 SLOT ACCEPTS 0.64–0.81mm DIA [#22–#20] AWG COPPER MAGNET WIRE. TWO WIRES OF THE SAME SIZE MAX PER SLOT.

3 AFTER INSERTION INTO PLASTIC HOLDER, TAB PORTION MUST BE BENT OVER 45° TO 90° OR POTTED–IN TO PREVENT PULL–OUT WHEN MATING RECEPTACLE IS DISCONNECTED.

4 VARNISH RESIST OVER 0.002032 [.000080] MIN TIN PLATE.

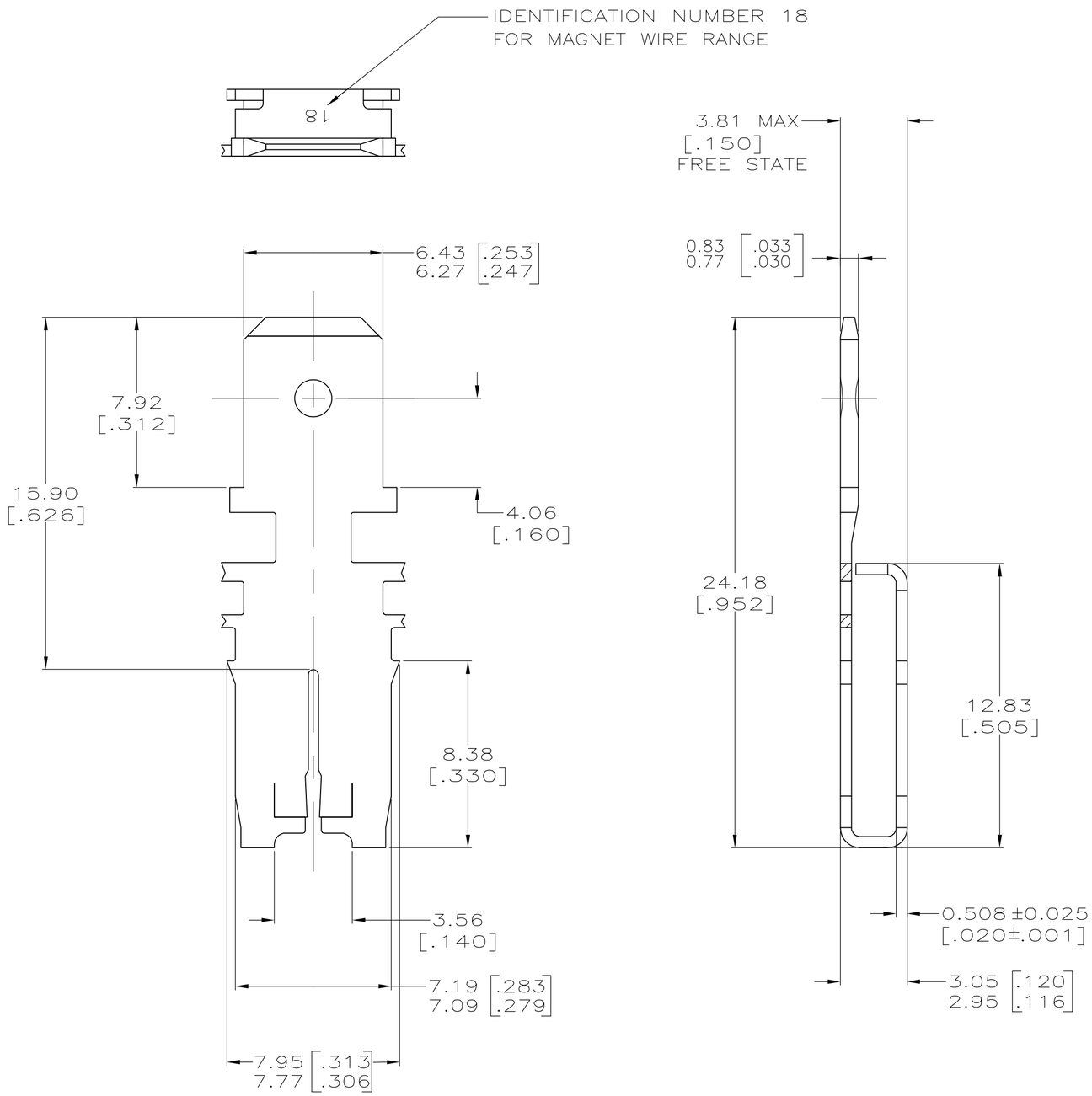

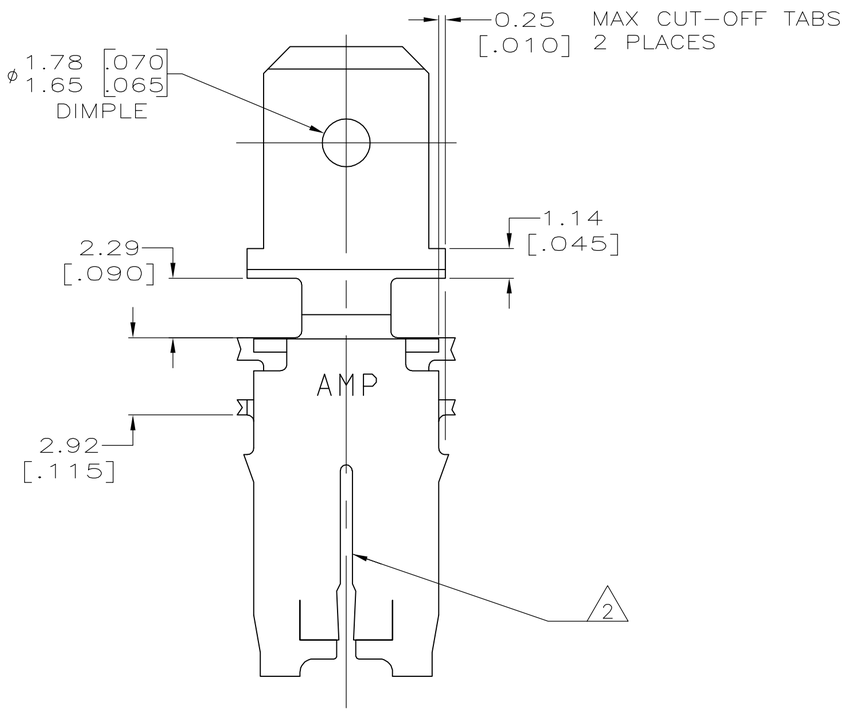

63155

63155–1
PART NUMBER

THIS DRAWING IS A CONTROLLED DOCUMENT.

DIMENSIONS: mm [INCHES]

TOLERANCES UNLESS OTHERWISE SPECIFIED:

0 PLC	±	–
1 PLC	±	–
2 PLC	±	0.25[.010]
3 PLC	±	–
4 PLC	±	–
ANGLES	±	–

MATERIAL: 4M PRE–MILLED BRASS

FINISH: 4

DWN	MICHAEL S. FEHER	07MAY1999
CHK	JEFF R. RUTH	07JUN1999
APVD	KURT A. RANDOLPH	07JUN1999
PRODUCT SPEC	108–2053	
APPLICATION SPEC	114–2066	
WEIGHT	–	

tyco Electronics — Tyco Electronics Corporation, Harrisburg, PA 17105–3608

NAME: TAB, 6.35 [.250] FASTON,™ 500 SERIES MAG–MATE™

SIZE	CAGE CODE	DRAWING NO	RESTRICTED TO
A2	00779	C–63155	–

CUSTOMER DRAWING | SCALE 6:1 | SHEET 1 OF 1 | REV J