ENG. NO SD-53316-****

EDP NO.

:MM DIMENSIONS IN METRIC DO NOT SCALE DRAWING

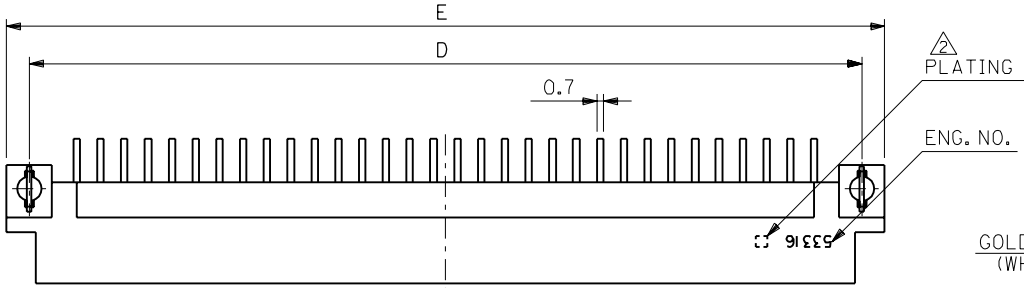

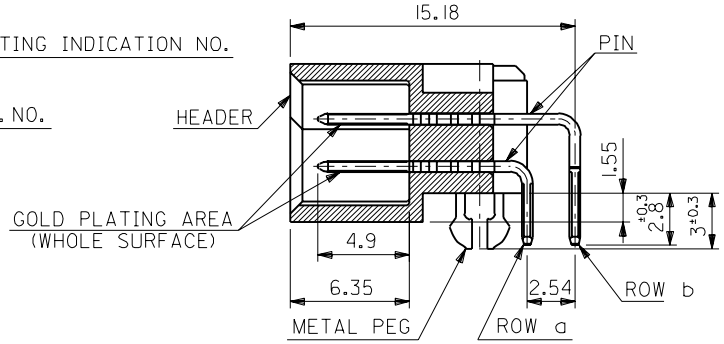

SECT. X-X
(SCALE: 4-1)

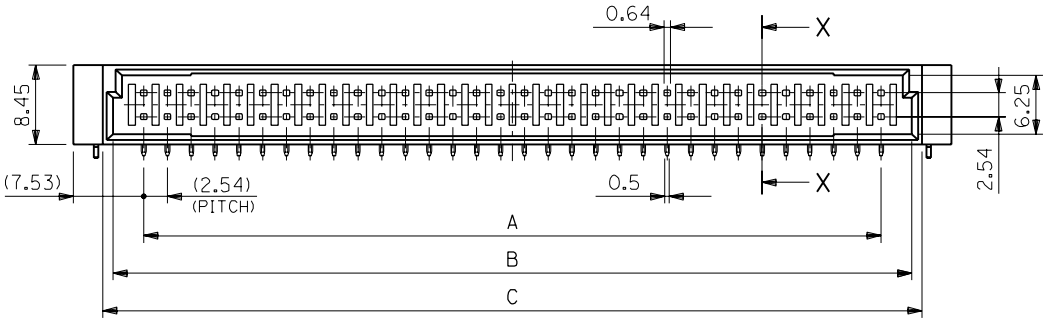

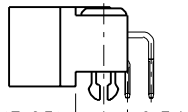

NOTES: 1. MATERIAL
HEADER: GLASS FILLED P.B.T. (WHITE), UL94V-0
PIN: BRASS (t=0.58)
METAL PEG: PHOSPHOR BRONZE (t=0.48),
TIN-LEAD OVER COPPER PLATING

2 PLATING & PLATING INDICATION NUMBER

ENG. NO.	CONTACT AREA GOLD [μmMIN.]	SOLDER AREA TIN-LEAD [μmMIN.]	UNDER PLATE NICKEL [μmMIN.]	PLATING INDICATION NUMBER
53316-***3	0.76	1.0	1.0	3
53316-***2	0.5			2
53316-***1	0.3			1
53316-***0	0.1			0

3. MATE WITH: 52299, 52385, 52479, 52482 SERIES.

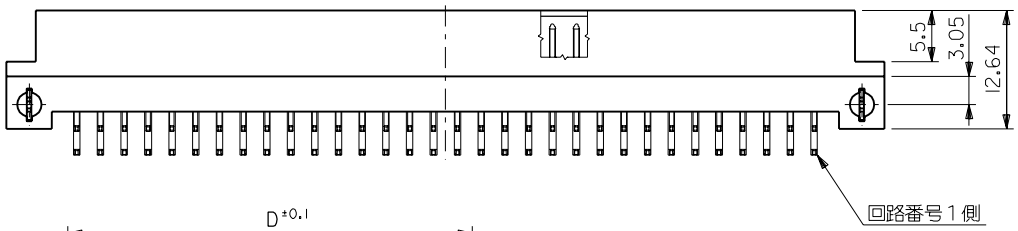

E	D	C	B	A	ENG. NO.	NO. OF CKTS.
93.80	88.90	87.50	85.30	78.74	53316-064*	64
76.02	71.12	69.72	67.52	60.96	-050*	50
68.40	63.50	62.10	59.90	53.34	-044*	44
53.16	48.26	46.86	44.66	38.10	-032*	32
37.92	33.02	31.62	29.42	22.86	-020*	20
32.84	27.94	26.54	24.34	17.78	53316-016*	16

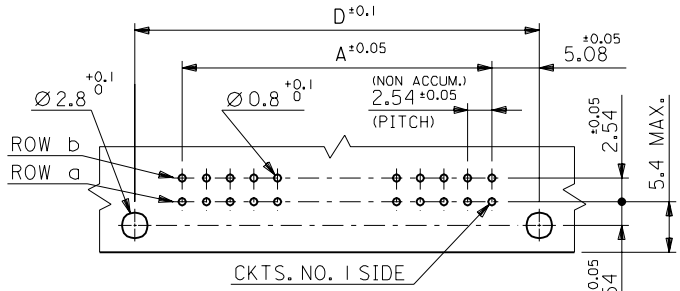

RECOMMENDED P.C.B. LAYOUT (THK.=1.6)
(VIEW ON COMPONENT SIDE)

角度 ANGLE	±3°
30以上 OVER	±0.3
10以上 30未満 OVER UNDER	±0.25
10未満 UNDER	±0.2
一般公差 GENERAL TOLERANCES	

記号 LTR	変更内容 REVISION RECORD	DR.	CHK.	日付 DATE
A	REVISED (J10145)	H.H		'91/2/22
0	RELEASED(J00922)	S.M	H.H	'90/8/27

REVISE ONLY ON CAD SYSTEM

材料 MATERIAL: SEE NOTES

仕上げ FINISH: SEE NOTES

適用電線範囲 WIRE RANGE

被覆外径 INS. RANGE

DRAWN BY '90/8/27 S.MOCHIZUKI

CHK'D BY

APP'D BY

尺度 SCALE 2 - 1

MOLEX-JAPAN CO.,LTD. 日本モレックス株式会社

EDP. NO.

ENG. NO. SD-53316-**** REV A

TITLE 名称 2.54 B TO B CONN. RIGHT ANGLE HEADER ASS'Y WITH METAL PEG (DUAL ROW)

53316.S21 A

THIS DRAWING CONTAINS INFORMATION THAT IS PROPRIETARY TO MOLEX(JAPAN) AND SHOULD NOT BE USED WITHOUT WRITTEN PERMISSION
本図面は日本モレックス（株）の所有する情報を含むもので当社の許可なく複製を禁止する。

MXJ-8