TOP VIEW

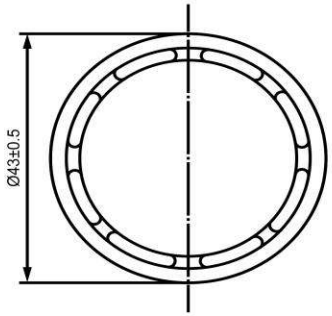

SIDE VIEW

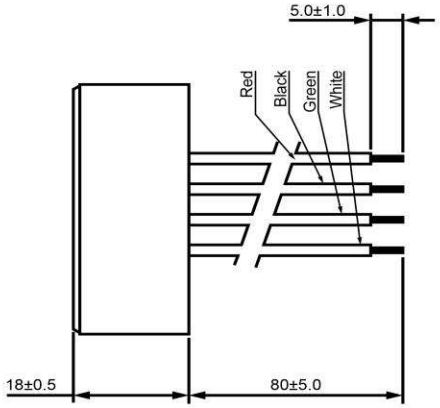

BOTTOM VIEW

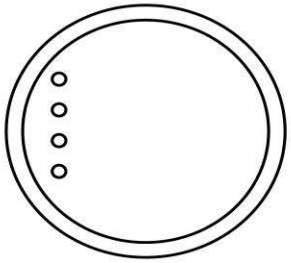

Specifications

Description	Value	Unit
Technology	Piezo	
Resonant Frequency	2,900	(Hz)
Rated Voltage	12	(V)
SPL @ 10cm	115	(dBA)
Tone	3 Options (see note 3)	
Mount Type	Flush Mount	
Voltage Range	6 ~ 28	(V)
Max Rated Current	25	(mA)
Housing Material	PBT	
Operating Temperature	-20 ~ +70	°C
Storage Temperature	-30 ~ +80	°C
Weight	20	(g)

Notes

1) All dimensions are in mm unless otherwise noted
2) All parts meet RoHS
3) Wiring options:

Fast Pulse	Red (+) White (-)
Slow Pulse	Red (+) Green (-)
Continuous	Red (+) Black (-)

DB UNLIMITED

Piezo Indicator

Revision History

Version	Description	Date	Approved
1	Released from Engineering	10/21/2013	J.S
2	Updated with Wiring Options	3/27/2015	J.S.

Drawn by	Date	Checked by	Date	Approved by	Date
A.B.	10/21/2013	C.E.	10/21/2013	J.S	10/21/2013

IP432912-3

Additional considerations can be found at www.dbunlimitedco.com/technical-articles.

©2013, DB Unlimited