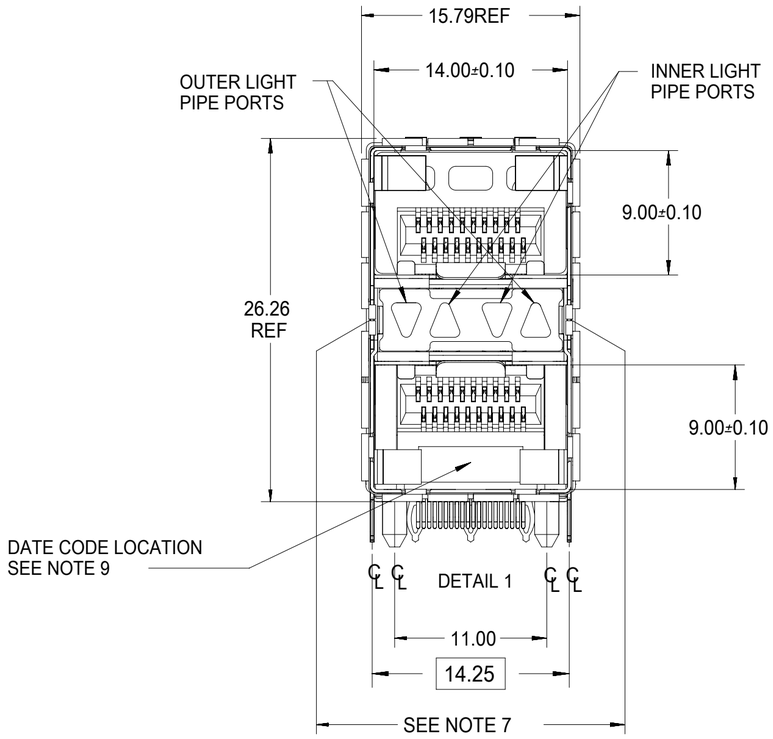

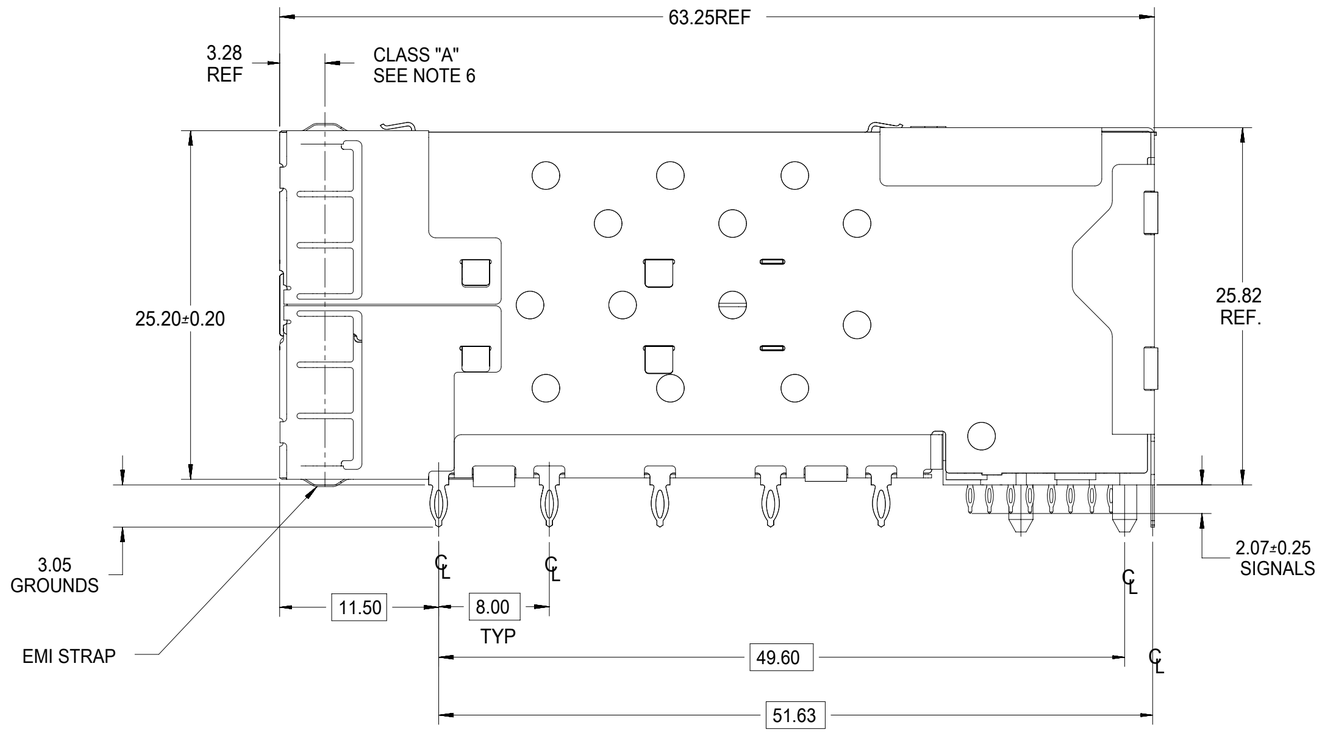

NOTES

1. MATERIAL:
   CAGE: NICKEL SILVER, THICKNESS: 0.25mm
   CONNECTOR HOUSING: GLASS FILLED LIQUID CRYSTAL POLYMER (LCP), UL 94V-0,
   COLOR: BLACK
   OVERMOLD TERMINAL HOUSING: GLASS FILLED LIQUID CRYSTAL POLYMER (LCP),
   UL 94V-0, COLOR: BLACK
   TERMINALS: TIN BRASS
   EMI GASKET: PHOS-BRONZE
   LIGHTPIPE HOUSING: ZINC
   LIGHTPIPES: POLYCARBONATE, UL 94 HB, COLOR: CLEAR
2. FINISHES:
   TERMINALS: CONTACT AREA: 0.76 MICROMETERS MINIMUM HARD GOLD OVER 1.27 MICROMETERS MINIMUM NICKEL.
   COMPLIANT TAIL - MATTE TIN/LEAD OPTION: 0.76 TO 1.52 MICROMETERS 90/10 MATTE TIN-LEAD OVER 0.76 MICROMETERS MINIMUM NICKEL.
   COMPLIANT TAIL - MATTE TIN OPTION: 0.76 TO 1.52 MICROMETERS MATTE TIN OVER 0.76 MICROMETERS MINIMUM NICKEL.
   LIGHTPIPE HOUSING: 80 MICROMETERS MINIMUM NICKEL OVER COPPER
   EMI GASKET: 2.54 MICROMETERS MINIMUM NICKEL OVERALL
3. REFER TO PS-75310-001 PRODUCT SPEC FOR ALL ELECTRICAL, MECHANICAL, AND ENVIRONMENTAL SPECIFICATIONS.
4. LIGHTPIPE PAD LAYOUT IS FOR O8O5 LOW-PROFILE LED PACKAGE, FOR OTHER RECOMMENDED LAYOUTS REFER TO MOLEX'S REPORT TS-75310-001.
5. REFER TO PK-75462-001 FOR ALL PACKAGING SPECIFICATIONS.
6. THE SURFACES CONFORM TO THE MOLEX COSMETIC SPEC PS-45499-002.
   ALL EXTERIOR SURFACES TO BE CLASS "B" SURFACE EXCEPT THE UNDERSIDE (CLASS "C") OF THE CAGE (SIDE TOWARD THE PCB) AND AS OTHERWISE NOTED.
7. THE OVERALL CAGE WIDTH AT THE VERTICAL CENTER OF THE FRONT EDGE WILL FALL WITHIN THIS DIMENSION: 15.05+/-0.30 MM. THIS PORTION OF THE CAGE WILL FLEX INWARD AS THE CAGE IS BEING INSERTED INTO THE BEZEL OPENING.
8. REFER TO AS-76090-001 FOR HIGH SPEED ROUTING RECOMMENDATIONS.
9. DATE CODE LOCATION IS SHOWN ABOVE.
   DATE CODE FORMAT: DDDY MX A1
   DDD = DAY OF THE YEAR
   Y = YEAR
   MX = MOLEX
   A = ALPHA CHARACTER - INDICATES MANUFACTURING LINE
   1 = NUMERIC CHARACTER - INDICATES PRODUCTION SHIFT

PART NUMBER	LIGHTPIPE CONFIGURATION (SEE VIEWS ON SHEET 2)	COMPLIANT TAIL PLATING
760445001	4 LIGHT PORTS	MATTE TIN
760445002	INNER 2 PORTS	MATTE TIN
760445003	OUTER 2 PORTS	MATTE TIN
760445004	OUTER 2 PORTS - SPECIAL CONFIG	MATTE TIN

QUALITY SYMBOLS
▽A = 0
▽E = 0
▽B = 0
▼ = 0
▽C = 0
☒ = 0
■ = 0
▽D = 0

THIS DRAWING CONTAINS INFORMATION THAT IS PROPRIETARY TO MOLEX ELECTRONIC TECHNOLOGIES, LLC AND SHOULD NOT BE USED WITHOUT WRITTEN PERMISSION

SEE REVISION TABLE
EC NO: 169912 2017/12/21
DRWN: SVANG01 2017/12/21
CHK'D: SVANG01 2018/01/02
APPR: CHIRSCHY
REV: L

GENERAL TOLERANCES (UNLESS SPECIFIED)
ANGULAR TOL ± 5.0 °
4 PLACES ±
3 PLACES ±
2 PLACES ± 0.13
1 PLACE ± 0.25
0 PLACES ±
DRAFT WHERE APPLICABLE MUST REMAIN WITHIN DIMENSIONS

DIMENSION UNITS: mm
SCALE: 1:1
DRWN BY: SVANG01 DATE: 2015/06/11
CHK'D BY: BBARKER DATE: 2015/06/17
APPR BY: SMILLER DATE: 2015/06/30
DRAWING SIZE: C
THIRD ANGLE PROJECTION

molex®

STACKED SFP+ 2X1 ASS'Y
WITH METAL EMI GASKET AND LIGHTPIPES

PRODUCT CUSTOMER DRAWING

SERIES	MATERIAL NUMBER	CUSTOMER
76044	SEE TABLE	GENERAL MARKET

DOCUMENT NUMBER	DOC TYPE	DOC PART	SHEET NUMBER
SD-76044-001	PSD	001	1 OF 6

RELEASE STATUS	P1	RELEASE DATE	02.01.2018 21:27:57

FORMAT: master-tb-prod-C
REVISION: G
DATE: 2015/02/06

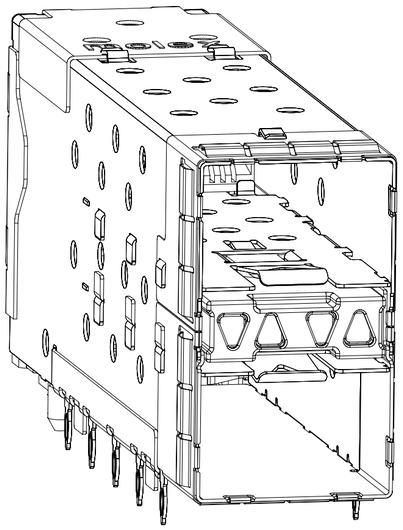

760440001 AND 760445001
WITH INNER AND OUTER LIGHTPIPES

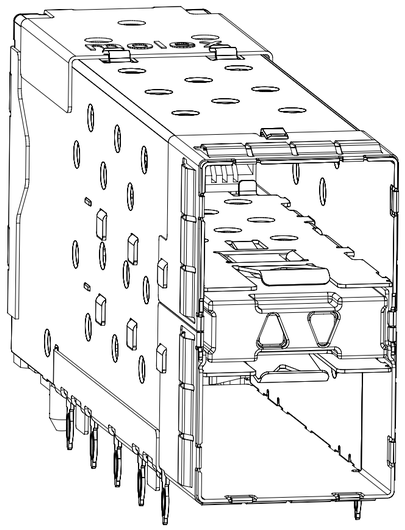

760440002 AND 760445002
WITH INNER LIGHTPIPES

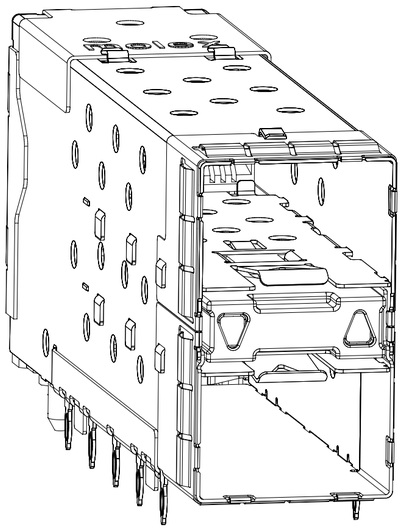

760440003 AND 760445003
WITH OUTER LIGHTPIPES

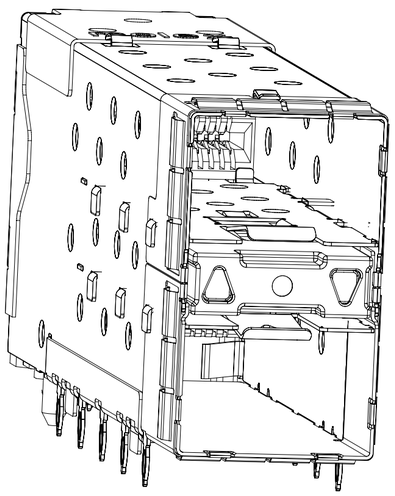

760445004
WITH OUTER LIGHTPIPES

QUALITY SYMBOLS	
F/A	= 0
F/C	= 0
F/D	= 0
▼	= 0
C	= 0
☒	= 0
■	= 0
C/V	= 0

THIS DRAWING CONTAINS INFORMATION THAT IS PROPRIETARY TO MOLEX ELECTRONIC TECHNOLOGIES, LLC AND SHOULD NOT BE USED WITHOUT WRITTEN PERMISSION

SEE REVISION TABLE
EC NO: 169912 2017/12/21
DRWN: SVANG01 2017/12/21
CHK'D: SVANG01 2018/01/02
APPR: CHIRSCHY

REV: L

GENERAL TOLERANCES (UNLESS SPECIFIED)
ANGULAR TOL ± 5.0 °

4 PLACES	±
3 PLACES	±
2 PLACES	± 0.13
1 PLACE	± 0.25
0 PLACES	±

DRAFT WHERE APPLICABLE MUST REMAIN WITHIN DIMENSIONS

DIMENSION UNITS	mm
SCALE	1:1
DRWN BY	SVANG01
DATE	2015/06/11
CHK'D BY	BBARKER
DATE	2015/06/17
APPR BY	SMILLER
DATE	2015/06/30
DRAWING SIZE	C
THIRD ANGLE PROJECTION	

molex®

STACKED SFP+ 2X1 ASS'Y
WITH METAL EMI GASKET AND LIGHTPIPES

PRODUCT CUSTOMER DRAWING

SERIES	MATERIAL NUMBER	CUSTOMER
76044	SEE TABLE	GENERAL MARKET

DOCUMENT NUMBER	DOC TYPE	DOC PART	SHEET NUMBER
SD-76044-001	PSD	001	2 OF 6

RELEASE STATUS	P1	RELEASE DATE	02.01.2018 21:27:57

FORMAT: master-tb-prod-C
REVISION: G
DATE: 2015/02/06

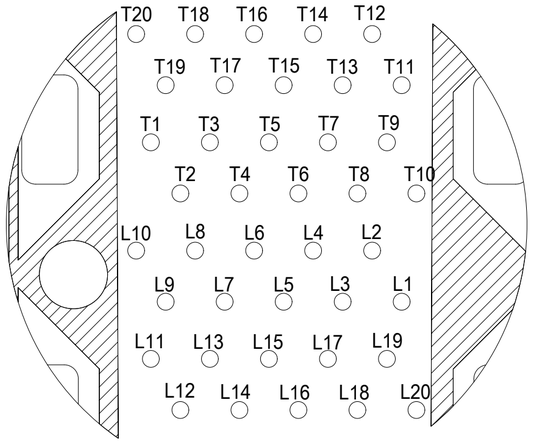

CONNECTOR PIN-OUT
COMPONENT SIDE OF BOARD
SCALE 10:1

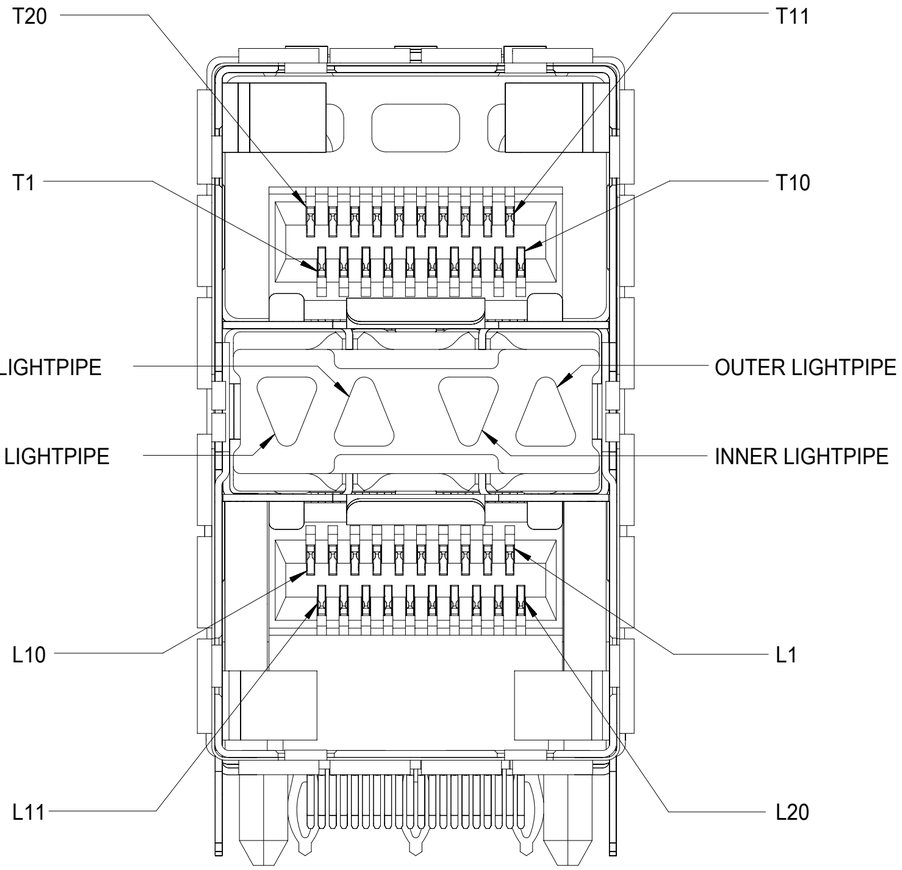

DETAIL 1
SCALE 6:1

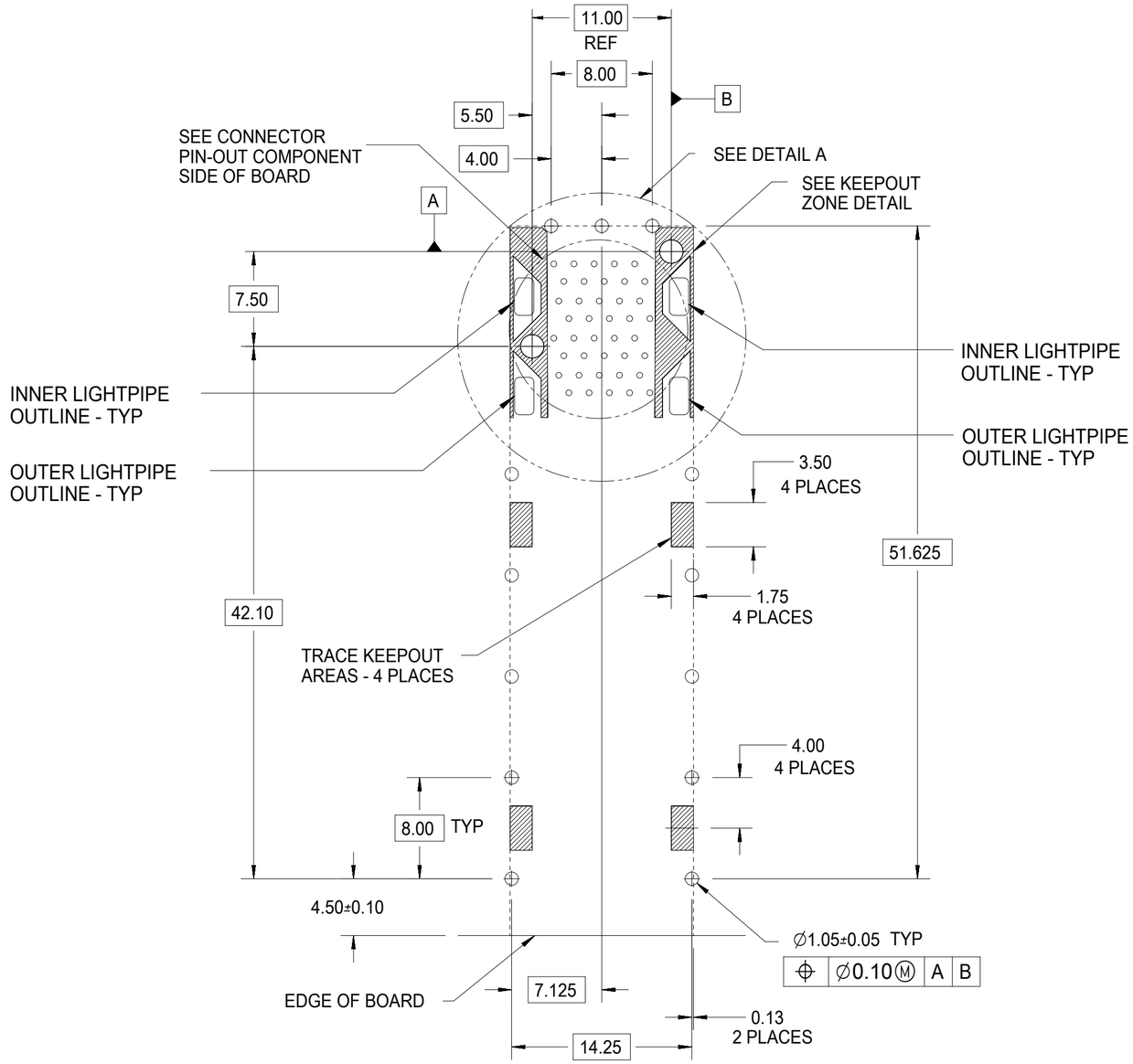

RECOMMENDED PCB LAYOUT - COMPONENT SIDE
RECOMMENDED PCB THICKNESS - 2.36 MM (.093 INCH)
THE ENTIRE AREA OF THE CONNECTOR FOOTPRINT
TO BE CONSIDERED THE KEEP OUT AREA FOR COMPONENTS
(OTHER THAN LIGHT PIPE LED'S).
THIS AREA IS INDICATED BY THE DASHED LINE

QUALITY SYMBOLS				
= 0				
= 0				
= 0				
= 0				
= 0				
= 0				
= 0				
= 0				

THIS DRAWING CONTAINS INFORMATION THAT IS PROPRIETARY TO MOLEX ELECTRONIC TECHNOLOGIES, LLC AND SHOULD NOT BE USED WITHOUT WRITTEN PERMISSION

SEE REVISION TABLE
EC NO: 169912 2017/12/21
DRWN: SVANG01 2017/12/21
CHK'D: SVANG01 2018/01/02
APPR: CHIRSCHY

REV: L

GENERAL TOLERANCES (UNLESS SPECIFIED)
ANGULAR TOL ± 5.0 °

4 PLACES	±
3 PLACES	±
2 PLACES	± 0.13
1 PLACE	± 0.25
0 PLACES	±

DRAFT WHERE APPLICABLE MUST REMAIN WITHIN DIMENSIONS

DIMENSION UNITS	SCALE
mm	1:1
DRWN BY: SVANG01	DATE: 2015/06/11
CHK'D BY: BBARKER	DATE: 2015/06/17
APPR BY: SMILLER	DATE: 2015/06/30
DRAWING SIZE: C	THIRD ANGLE PROJECTION

molex®

STACKED SFP+ 2X1 ASS'Y
WITH METAL EMI GASKET AND LIGHTPIPES

PRODUCT CUSTOMER DRAWING

SERIES	MATERIAL NUMBER	CUSTOMER
76044	SEE TABLE	GENERAL MARKET

DOCUMENT NUMBER	DOC TYPE	DOC PART	SHEET NUMBER
SD-76044-001	PSD	001	3 OF 6

RELEASE STATUS	P1	RELEASE DATE	02.01.2018	21:27:57

FORMAT: master-tb-prod-C
REVISION: G
DATE: 2015/02/06

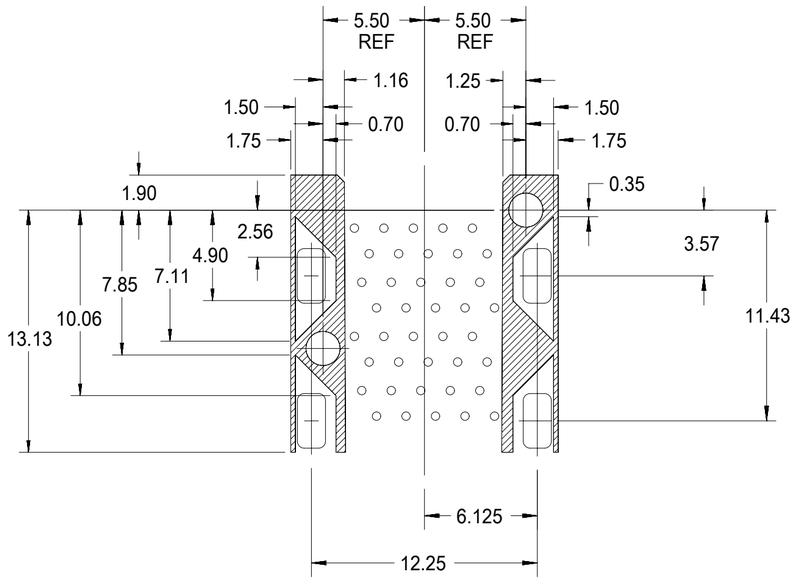

DETAIL - LIGHTPIPE AND OTHER ZONES
SCALE 8:1

THE HATCHED AREA IN THIS VIEW INDICATES ZONES THAT ARE OCCUPIED BY THE PLASTIC HOUSING THAT SEATS AGAINST THE PCB AND BY THE VERTICAL METAL CAGE WALL THAT STOPS JUST SHORT OF THE PCB

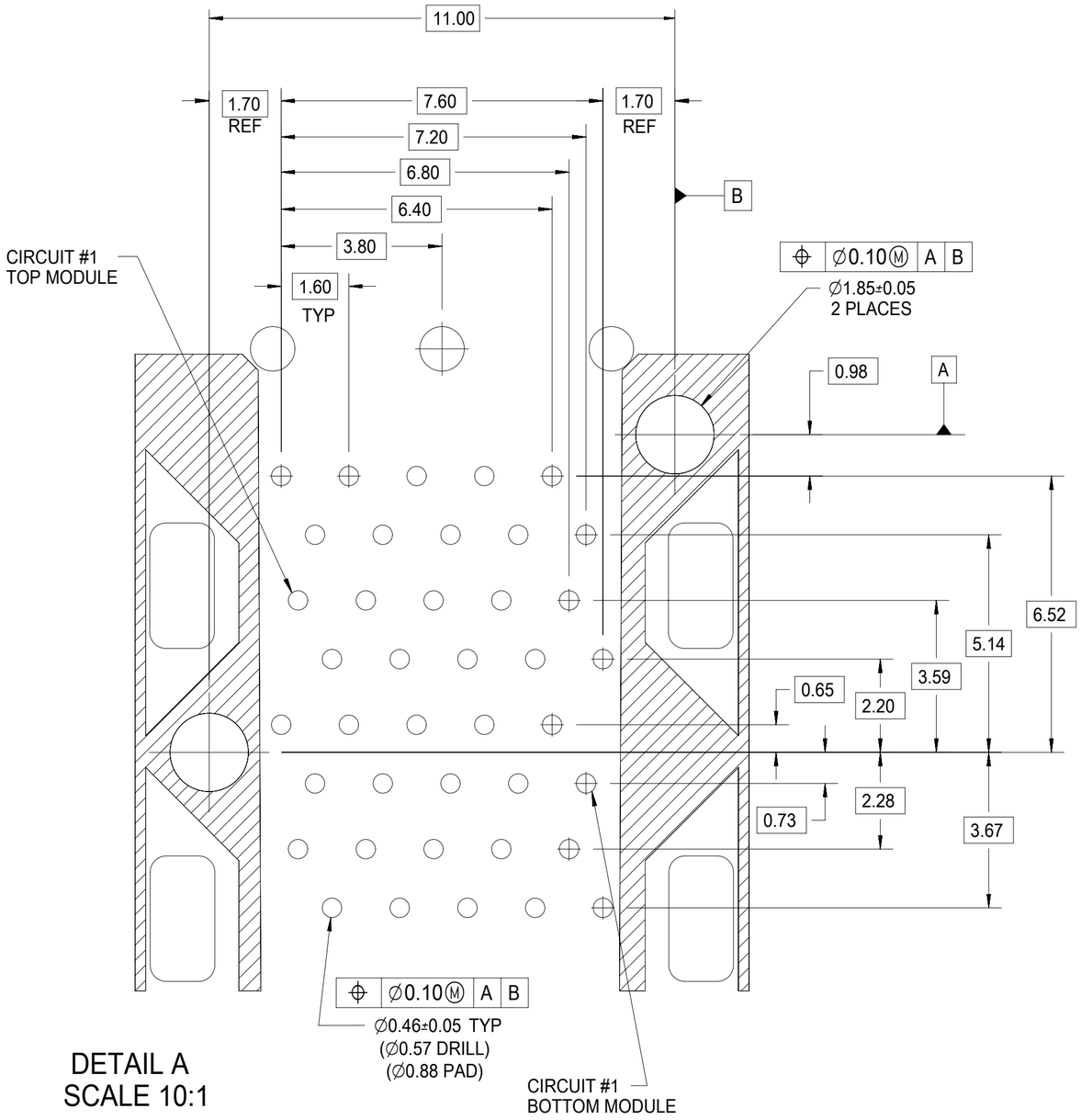

DETAIL A
SCALE 10:1

QUALITY SYMBOLS	
▽ =	0
▽ =	0
▽ =	0
▼ =	0
▽ =	0
☒ =	0
■ =	0
▽ =	0

THIS DRAWING CONTAINS INFORMATION THAT IS PROPRIETARY TO MOLEX ELECTRONIC TECHNOLOGIES, LLC AND SHOULD NOT BE USED WITHOUT WRITTEN PERMISSION

SEE REVISION TABLE
EC NO: 169912 2017/12/21
DRWN: SVANG01 2017/12/21
CHK'D: SVANG01 2018/01/02
APPR: CHIRSCHY

REV: L

GENERAL TOLERANCES (UNLESS SPECIFIED)

ANGULAR TOL	± 5.0 °
4 PLACES	±
3 PLACES	±
2 PLACES	± 0.13
1 PLACE	± 0.25
0 PLACES	±

DRAFT WHERE APPLICABLE MUST REMAIN WITHIN DIMENSIONS

DIMENSION UNITS	mm
SCALE	1:1
DRWN BY	SVANG01
DATE	2015/06/11
CHK'D BY	BBARKER
DATE	2015/06/17
APPR BY	SMILLER
DATE	2015/06/30
DRAWING SIZE	C
THIRD ANGLE PROJECTION	

molex®

STACKED SFP+ 2X1 ASS'Y WITH METAL EMI GASKET AND LIGHTPIPES

PRODUCT CUSTOMER DRAWING

SERIES	MATERIAL NUMBER	CUSTOMER
76044	SEE TABLE	GENERAL MARKET

DOCUMENT NUMBER	DOC TYPE	DOC PART	SHEET NUMBER
SD-76044-001	PSD	001	4 OF 6

RELEASE STATUS	P1	RELEASE DATE	02.01.2018	21:27:57

FORMAT: master-tb-prod-C
REVISION: G
DATE: 2015/02/06

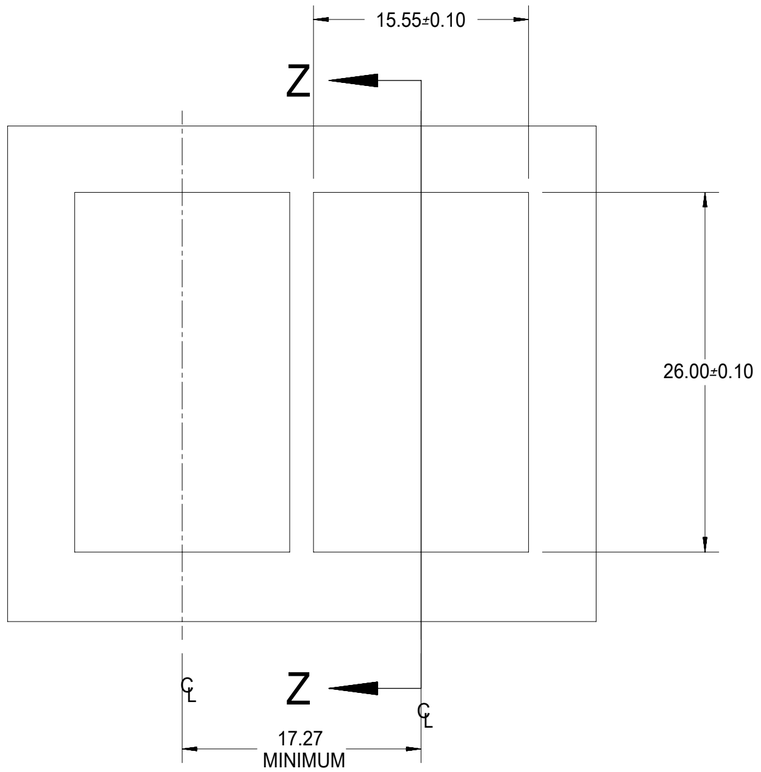

BEZEL CUT-OUT CENTER SPACING DETAIL
BEZEL THICKNESS 0.8-2.6

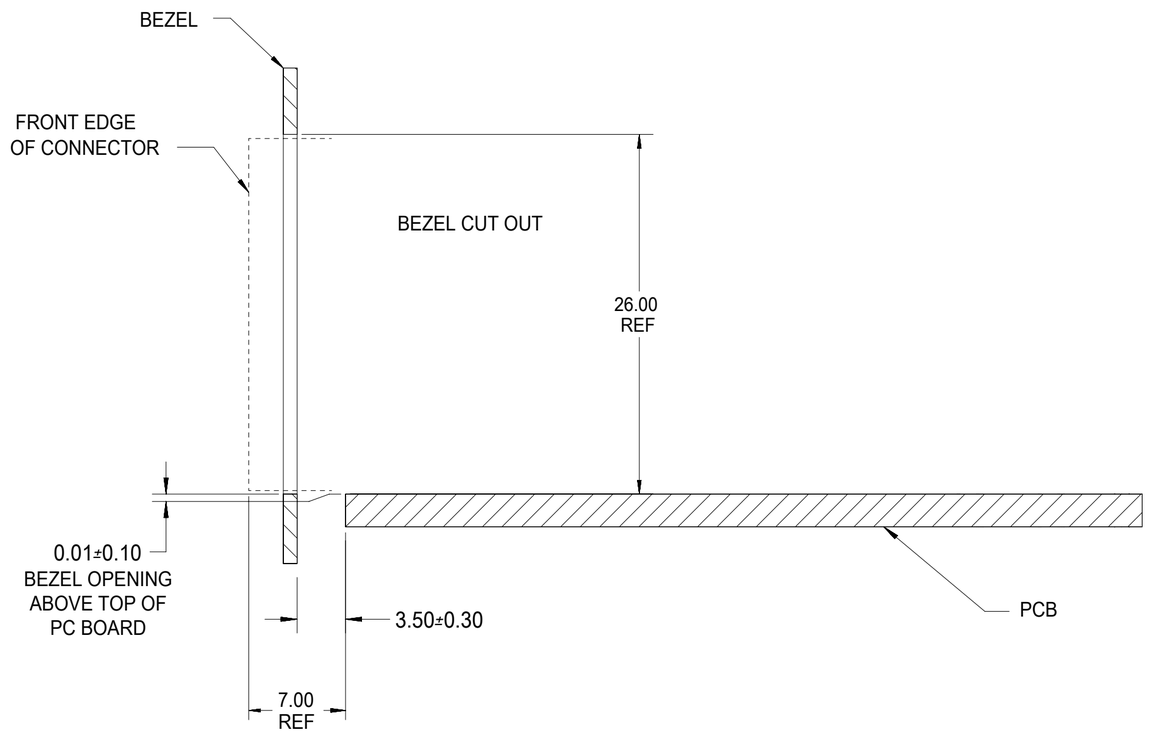

SECTION Z-Z

QUALITY SYMBOLS	
A	= 0
E	= 0
B	= 0
▼	= 0
C	= 0
☒	= 0
■	= 0
C	= 0

THIS DRAWING CONTAINS INFORMATION THAT IS PROPRIETARY TO MOLEX ELECTRONIC TECHNOLOGIES, LLC AND SHOULD NOT BE USED WITHOUT WRITTEN PERMISSION

SEE REVISION TABLE
EC NO: 169912 2017/12/21
DRWN: SVANG01 2017/12/21
CHK'D: SVANG01 2018/01/02
APPR: CHIRSCHY

REV: L

GENERAL TOLERANCES (UNLESS SPECIFIED)
ANGULAR TOL ± 5.0 °

4 PLACES	±
3 PLACES	±
2 PLACES	± 0.13
1 PLACE	± 0.25
0 PLACES	±

DRAFT WHERE APPLICABLE MUST REMAIN WITHIN DIMENSIONS

DIMENSION UNITS	SCALE
mm	1:1

DRWN BY	DATE
SVANG01	2015/06/11
CHK'D BY	DATE
BBARKER	2015/06/17
APPR BY	DATE
SMILLER	2015/06/30

DRAWING SIZE: C
THIRD ANGLE PROJECTION

molex®

STACKED SFP+ 2X1 ASS'Y
WITH METAL EMI GASKET AND LIGHTPIPES

PRODUCT CUSTOMER DRAWING

SERIES	MATERIAL NUMBER	CUSTOMER
76044	SEE TABLE	GENERAL MARKET

DOCUMENT NUMBER	DOC TYPE	DOC PART	SHEET NUMBER
SD-76044-001	PSD	001	5 OF 6

RELEASE STATUS	P1	RELEASE DATE	02.01.2018	21:27:57

FORMAT: master-tb-prod-C
REVISION: G
DATE: 2015/02/06

REV	DATE	DESCRIPTION
J	11/21/2017	UPDATE VIEWS TO SHOW HOOKS AND POCKETS, CLARIFY NOTE 1, MASTERED TO NX AND RELEASE
K	11/28/2017	CHANGE REVISION G TO J IN REVISION TABLE, REMOVED OBSOLETED PART NUMBERS 76044-0001/0002/0003 FROM TABLE ON SHEET 1.
L	12/21/2017	UPDATE VIEW TO INDICATE ONLY 5 TAILS PER SIDE ON TOP COVER

QUALITY SYMBOLS

E = 0
F = 0
G = 0
▼ = 0
C = 0
☒ = 0
■ = 0
V = 0

THIS DRAWING CONTAINS INFORMATION THAT IS PROPRIETARY TO MOLEX ELECTRONIC TECHNOLOGIES, LLC AND SHOULD NOT BE USED WITHOUT WRITTEN PERMISSION

SEE REVISION TABLE

EC NO: 169912 2017/12/21
DRWN: SVANG01 2017/12/21
CHK'D: SVANG01 2018/01/02
APPR: CHIRSCHY

REV: L

GENERAL TOLERANCES (UNLESS SPECIFIED)

ANGULAR TOL ± 5.0 °	
4 PLACES	±
3 PLACES	±
2 PLACES	± 0.13
1 PLACE	± 0.25
0 PLACES	±

DRAFT WHERE APPLICABLE MUST REMAIN WITHIN DIMENSIONS

DIMENSION UNITS: mm
SCALE: 1:1
DRWN BY: SVANG01 DATE: 2015/06/11
CHK'D BY: BBARKER DATE: 2015/06/17
APPR BY: SMILLER DATE: 2015/06/30
DRAWING SIZE: C
THIRD ANGLE PROJECTION

molex®

STACKED SFP+ 2X1 ASS'Y WITH METAL EMI GASKET AND LIGHTPIPES

PRODUCT CUSTOMER DRAWING

SERIES	MATERIAL NUMBER	CUSTOMER
76044	SEE TABLE	GENERAL MARKET

DOCUMENT NUMBER	DOC TYPE	DOC PART	SHEET NUMBER
SD-76044-001	PSD	001	6 OF 6

RELEASE STATUS	P1	RELEASE DATE	02.01.2018 21:27:57

FORMAT: master-tb-prod-C
REVISION: G
DATE: 2015/02/06