THIS DRAWING IS UNPUBLISHED. RELEASED FOR PUBLICATION -,- .
© COPYRIGHT - BY TYCO ELECTRONICS CORPORATION. ALL RIGHTS RESERVED.

LOC	DIST
CM	00

REVISIONS

P	LTR	DESCRIPTION	DATE	DWN	APVD
	C2	REVISION PER ECO-13-013432	27AUG2013	M.T	D.Z

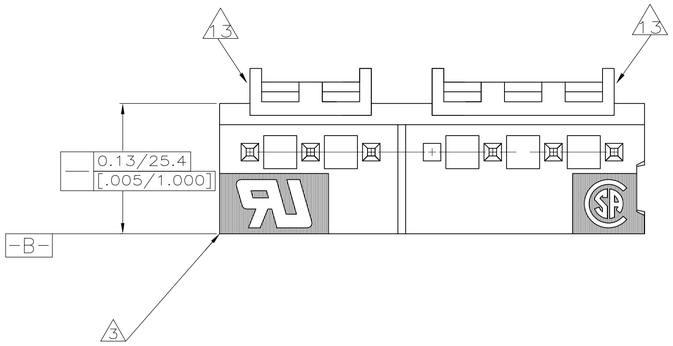

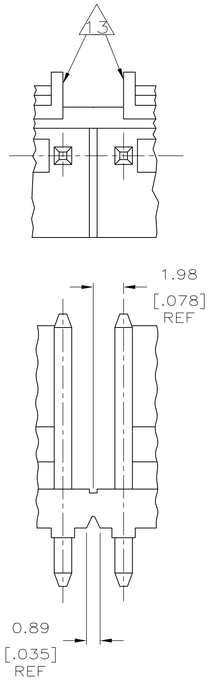

INTERRUPTED WALL FOR POSITION SIZES 6 AND ABOVE 12

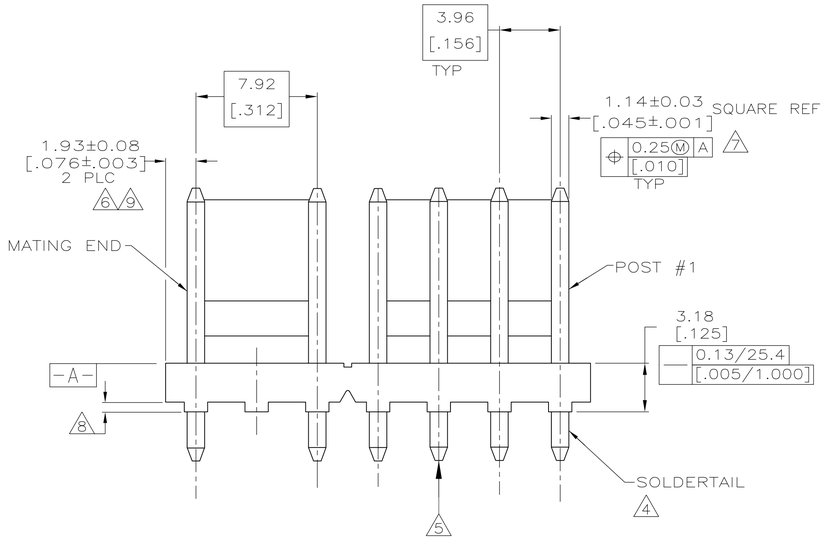

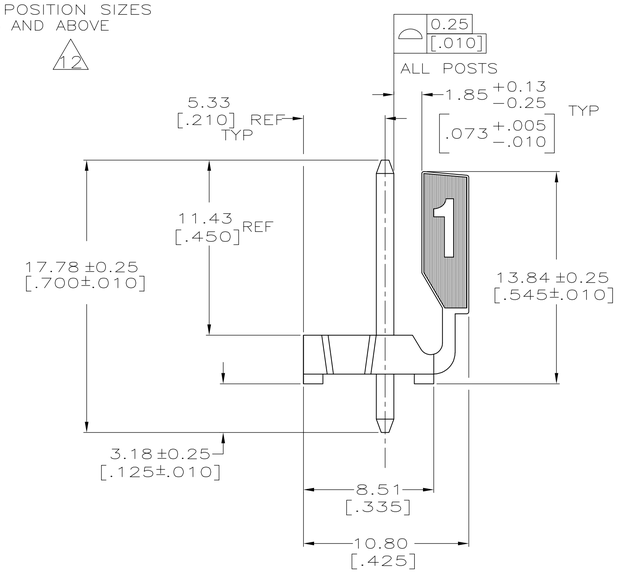

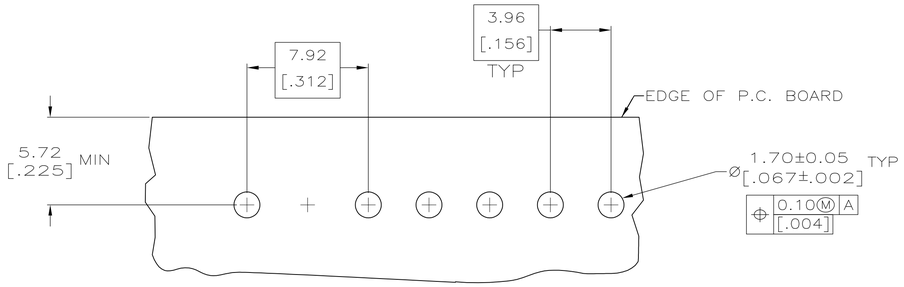

RECOMMENDED MOUNTING HOLE PATTERN FOR 1.57 [.062] THICK P.C. BOARD 10

1. MATERIAL
   HOUSING: THERMOPLASTIC POLYESTER, GLASS FILLED, DR-48. UL94V-O.
   POST: COPPER ALLOY
2. FINISH
   HOUSING: BLACK
   POST: BRIGHT TIN-LEAD (93/7) 0.00380 [.000150]-0.00880 [.000350] THICK OVER NICKEL UNDERPLATE 0.00130 [.000050] MINIMUM THICK OR MATTE TIN PLATE 0.00380 [.000150] THICK OVER NICKEL UNDERPLATE 0.00130 [.000050] MINIMUM THICK IF LEAD FREE.
3. UL MARKING MAY NOT APPEAR ON THE 3 POSITION SIZE.
4. POST SOLDERTAILS COMPLY WITH AMP SOLDERABILITY SPEC 109-11-2.
5. POST WITHSTANDS 13.34N (3 LB) MIN AXIAL FORCE IN EITHER DIRECTION WITHOUT DISLODGING.
6. APPLIES AT -A- .
7. APPLIES WHEN THE HEADER IS STRAIGHT.
8. PLASTIC PROJECTIONS PERMITTED IN THIS ZONE.
9. COORDINATE DIMENSIONS APPLIES FROM THE CENTER OF THE ACTUAL FEATURE.
10. SOLDER SIDE OF BOARD IS SHOWN.
11. DIMENSIONS IN BRACKETS ARE IN INCHES.
12. ALL POSITION SIZES HAVE THE BACK WALL NOTCHED ON BOTH ENDS AS SHOWN. THE 2 THRU 5 POSITION SIZES HAVE SOLID BACK WALLS. POSITION SIZES 6 AND ABOVE HAVE AN INTERRUPTED BACK WALL AT VARIOUS LOCATIONS (SEE TABLE FOR INTERRUPTION(S) LOCATIONS).
13. EDGE OF POLARIZING LOCK WALL TO BE IN LINE WITH CENTERLINE OF ADJACENT POST WITHIN ±0.13 [.005].
14. NOTCH SHOWN MAY OR MAY NOT APPEAR.
15. OBSOLETE PART NUMBER

	YES	4 & 5	31.57	[1.243]	7	3-647184-7
15	NO	4 & 5	31.57	[1.243]	7	647184-7
NOTES	LEAD FREE	BACK WALL INTERRUPTIONS BETWEEN POSTS	mm	[IN]	NO OF POSITIONS	PART NUMBER
			L			

THIS DRAWING IS A CONTROLLED DOCUMENT.

DIMENSIONS: mm [INCHES]

TOLERANCES UNLESS OTHERWISE SPECIFIED:
0 PLC ±
1 PLC ±
2 PLC ±
3 PLC ± 0.13 [.005]
4 PLC ±
ANGLES ±

MATERIAL 1 FINISH 2

DWN S. HOOVER 22-OCT-2004
CHK D. BOSSI 22-OCT-2004
APVD D. BOSSI 22-OCT-2004
PRODUCT SPEC
APPLICATION SPEC
WEIGHT

Tyco Electronics — Tyco Electronics Corporation, Harrisburg, Pa 17105-3608

NAME ASSEMBLY- MTA .156 HEADER, POLARIZED LOCK, STR .045 SQUARE POST, TIN OR TIN-LEAD PLATED, OMITTED POST #6, SPECIAL

SIZE A1 | CAGE CODE 00779 | DRAWING NO C-647184 | RESTRICTED TO

CUSTOMER DRAWING | SCALE 5:1 | SHEET 1 OF 1 | REV C2