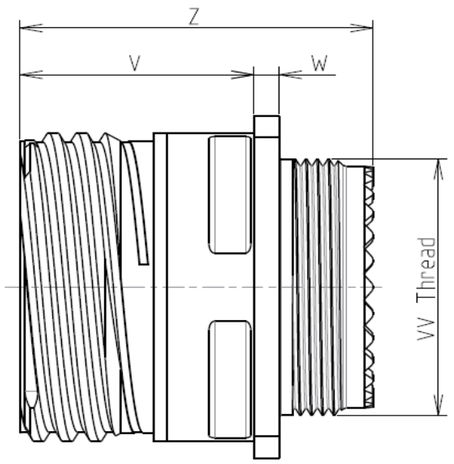

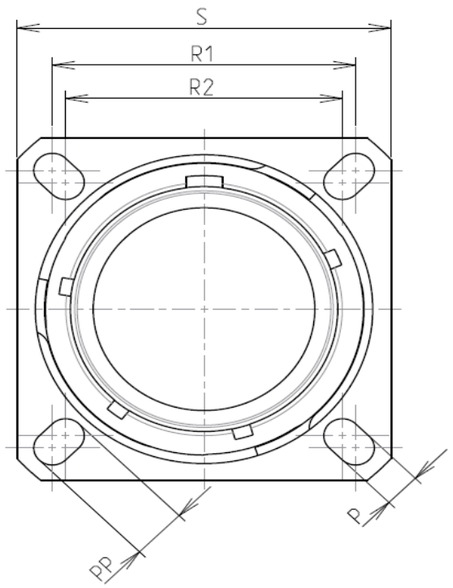

Keying Shown as example

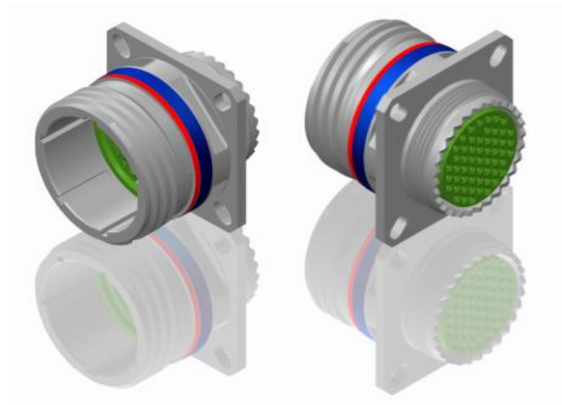

LAYOUT SHOWN AS EXAMPLE

CHARACTERISTICS

-Standard : Based on MIL-DTL-38999 Series III
-Shell Material : Stainless Steel
-Shell Plating : Nickel
-Insulator : Thermoplastic
-Contacts : Copper Alloy
-Seals & Grommet : Silicon Elastomer
-Contact Plating : Gold over copper Alloy 0.8µm minimum
-Durability : 500 Mating cycles
-Delivered with Souriau contacts and Accessories

-Temperature Range : -65°C to +200°C
-Salt Spray : 500 hours
-Mass : 28.9 g ± 10%

Connector dimension	
Dim	**Nominal**
P	3.25±0.2
PP	4.93±0.2
R1	20.62
R2	18.26
S	26.2±0.3
V	20.83+0/-1.25
W	2.1/2.5
Z	31.5 Max
VV THREAD	M15x1-6g

SOURIAU shall not be liable for any non-conformity or damage due to a use of the Products which does not comply with the Specifications issued by either of the Parties or by a third party (professional recommendation, technical notice.)

Country	Jurisdiction & Control List
FR	Not Listed

PN: 8D011S22PD

ISS	DATE	Latest modification - by	MOD N°
A	07-10-2016	First Release	

Designed By: Date: **CUSTOMER DRAWING**

TITLE Stainless Steel Receptacle 8D series

SCALE NA | General linear Tolerances: ±-- | NPRDS / PROJECT **859**

SOURIAU WWW.SOURIAU.COM

This document is the property of SOURIAU it must not be reproduced or communicated without permission

FORMAT A3 | SOURIAU DRG N° 8D011S22PD-C | SHEET 1/2

BASIC SERIES:	8D	0	-	11	S	22	P	D

SHELL TYPE : Square Flange Receptacle
CONTACT TYPE : Standard Crimp Contact
SHELL SIZE : 11
PLATING : S = Nickel

ORIENTATION : D
CONTACT TYPE : PIN(500 Matings)
CONTACT LAYOUT : 11-22

Contact Layout

22*

4#22D

11-22		
Ctc	X	Y
A	1.905	1.905
B	1.905	-1.905
C	-1.905	-1.905
D	-1.905	1.905

Panel Cutout

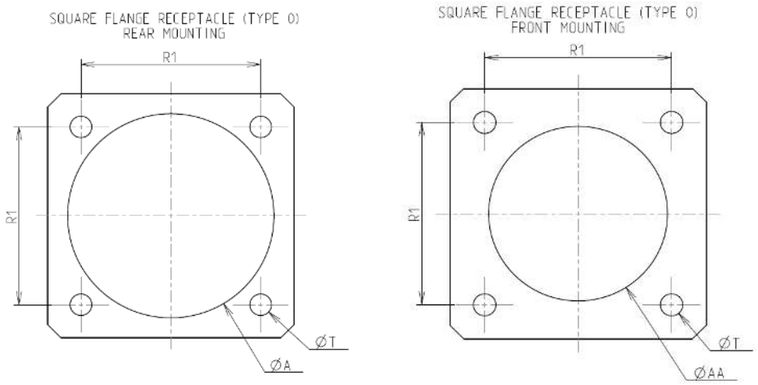

Dim	Nominal
ØA	20.22 min
ØAA	15.88 min
R1	20.62
ØT	3.25 ±0.13

SOURIAU shall not be liable for any non-conformity or damage due to a use of the Products which does not comply with the Specifications issued by either of the Parties or by a third party (professional recommendation, technical notice.)

Country	Jurisdiction & Control List
FR	Not Listed

PN: 8D011S22PD

ISS	DATE	Latest modification - by	MOD N°
A	07-10-2016	First Release	

Designed By: Date: **CUSTOMER DRAWING**

TITLE Stainless Steel Receptacle 8D series

SCALE NA | General linear Tolerances: ±-- | NPRDS / PROJECT **859**

SOURIAU WWW.SOURIAU.COM

This document is the property of SOURIAU it must not be reproduced or communicated without permission

FORMAT A3 | SOURIAU DRG N° 8D011S22PD-C | SHEET 2/2