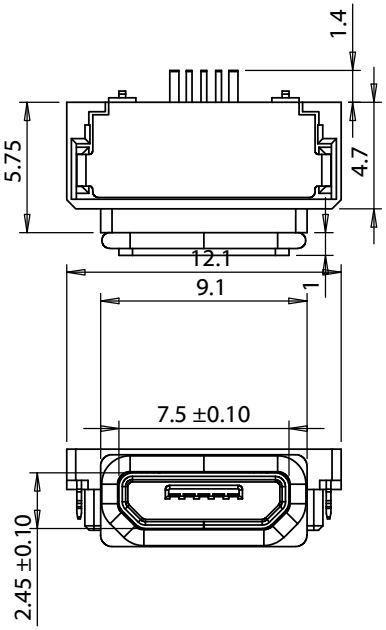

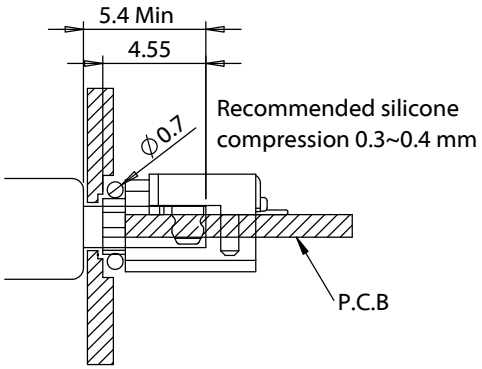

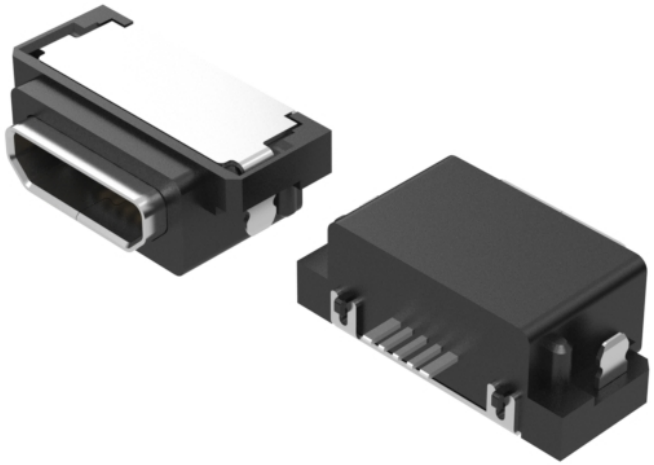

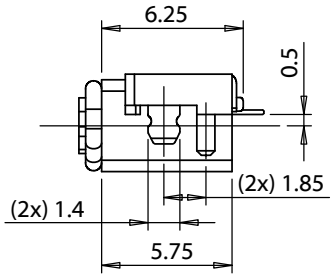

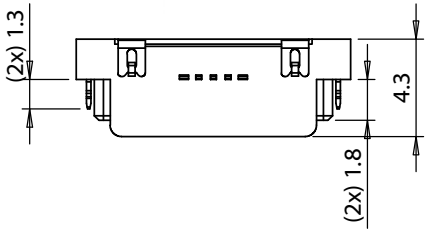

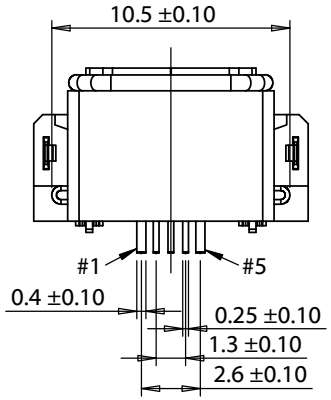

Signal Name	
1	Vcc
2	D-
3	D+
4	ID
5	GND

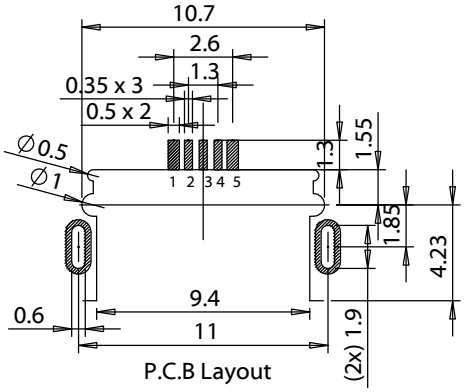

P.C.B Layout

Revision:	Date:	Description:
A	3/18/2021	Initial release

Prepared: JD Digitally signed by JD Date: 2021.10.15 16:21:53 -07'00'

Verified: AG Digitally signed by AG Date: 2021.10.15 17:55:54 -07'00'

Dimensions are in millimeters.
Tolerances:
X: ± 0.25 mm
X.X: ± 0.25 mm
X.XX: ± 0.25 mm

Notes:

RoHS compliant

Function test: no open, no short circuit, no intermittent

Description:

Connector, USB micro B jack, surface mount, through hole, 90°, board cutout, nickel, IPX7 waterproof

TENSILITY

tel 1.541.323.3228 *800* 877.670.7118
fax 1.541.323.4202 *web* tensility.com

Size: A

Part number: 54-00281

Scale: 1:1

Sheet 1 of 2

5 4 3 2 1

Materials
1. Shell, stainless steel, nickel plating
2. Pins, phosphor bronze, gold plating
3. Insulator, Nylon PA10T+ 30% GF, black
4. Seal, Silicone Rubber, black

Electrical
Rated voltage: 30 Vdc
Rated current: 3 A (pin 1, 5), 0.5 A (pin 2, 3, 4)
Dielectric strength: 1 min @ 500 Vac
Insulation resistance: 1000 MΩ min
Contact resistance: 30 mΩ or less

Mechanical
Insertion force: 3.5 kgf maximum
Withdrawal force: 0.8 kgf minimum
Durability: 5000 cycle minimum
Plug interface conforms to USB 2.0 specification

Environmental
Waterproof: IPX7

Operating range
-40 ~ 85 °C

Packaging
Tape and Reel
Silicone seal packaged separately
1000 pieces per reel
10 reels per carton

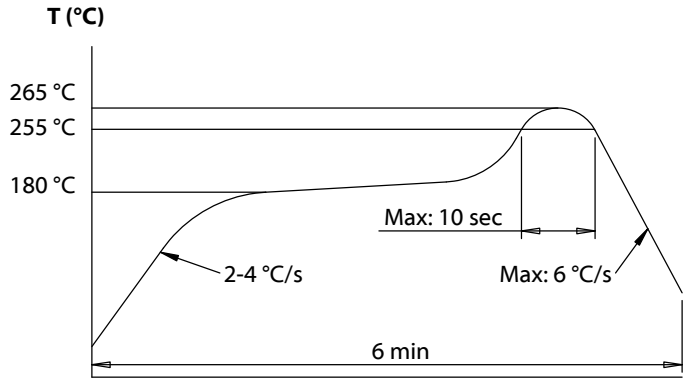

Reflow soldering temperature profile

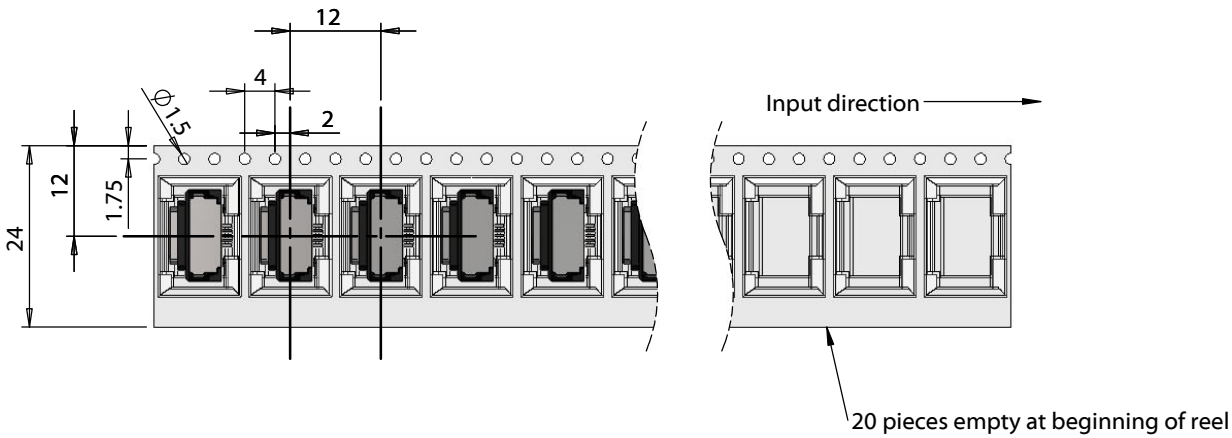

Revision:	Date:	Description:
A	3/18/2021	Initial release

Prepared: JD — Digitally signed by JD Date: 2021.10.15 16:22:07 -07'00'

Verified: AG — Digitally signed by AG Date: 2021.10.15 17:56:08 -07'00'

Notes:
RoHS compliant
Function test: no open, no short circuit, no intermittent

Description:
Connector, USB micro B jack, surface mount, through hole, 90°, board cutout, nickel, IPX7 waterproof

TENSILITY
tel 1.541.323.3228 800 877.670.7118
fax 1.541.323.4202 web tensility.com

Size: A
Part number: 54-00281
Scale: 1:1

5 4 3 2 1