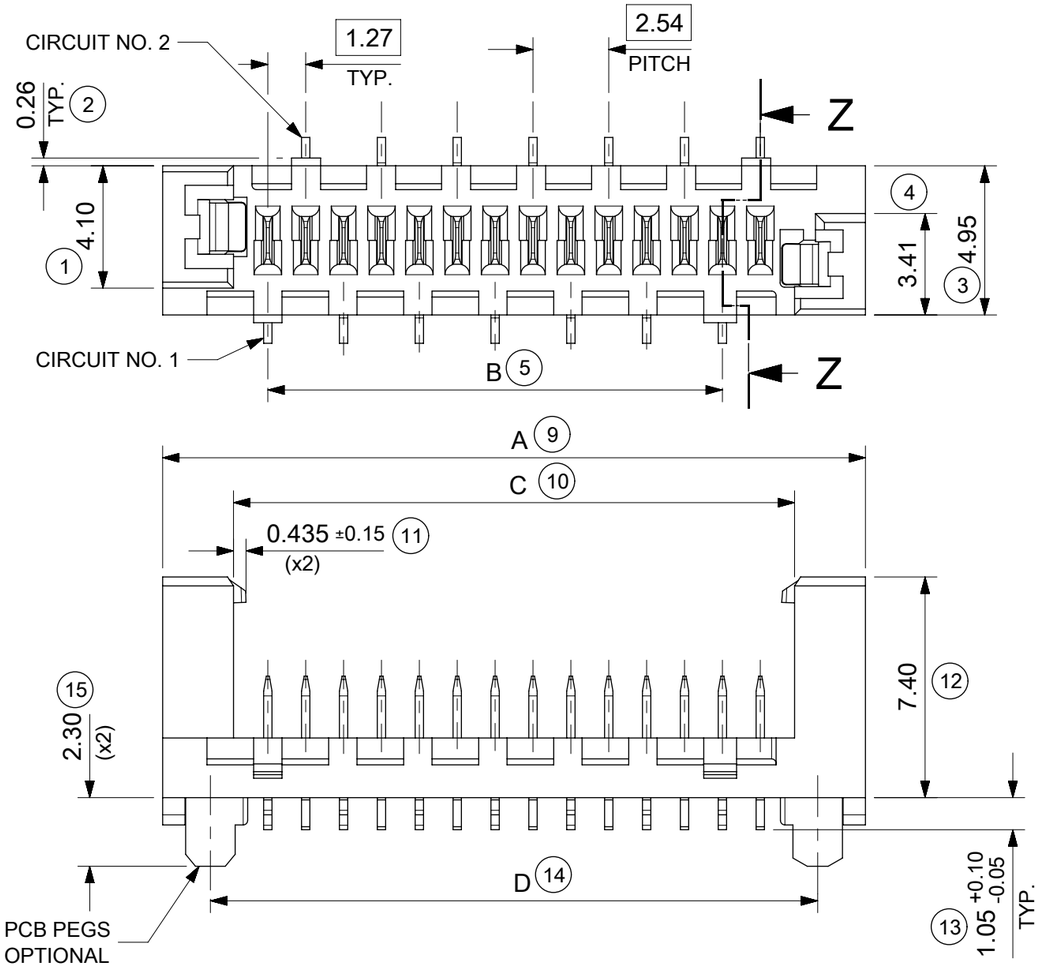

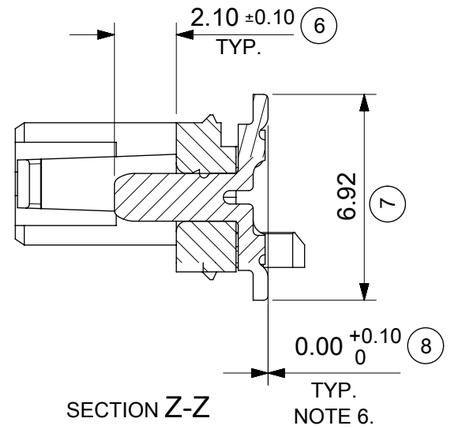

14 CIRCUIT SHOWN FOR ILLUSTRATION ONLY.

PART NO.	NUMBER OF CKTS	DIMN. A	DIMN. B	DIMN. C	DIMN. D	
90816-**04	04	10.86	3.81	6.11	7.66	SEE NOTE-7
90816-**06	06	13.40	6.35	8.65	10.20	
90816-**08	08	15.94	8.89	11.19	12.74	
90816-**10	10	18.48	11.43	13.73	15.28	
90816-**12	12	21.02	13.97	16.27	17.82	
90816-**14	14	23.56	16.51	18.81	20.36	
90816-**16	16	26.10	19.05	21.35	22.90	
90816-**18	18	28.64	21.59	23.89	25.44	
90816-**20	20	31.18	24.13	26.43	27.98	
90816-**22	22	33.72	26.67	28.97	30.52	
90816-**24	24	36.26	29.21	31.51	33.06	
90816-**26	26	38.80	31.75	34.05	35.60	

NOTES:

1. MATERIAL
   HOUSING: PPA, GLASS-FILLED, COLOUR: BLACK, UL 94-HB.
   TERMINAL: BRASS

2. FINISHES: TERMINAL
   Gold : UNDERPLATED 1.27µm MIN NICKEL
   3-5µm TIN SELECTIVE
   0.76µm MIN. SELECTIVE GOLD
   TIN: 3 MICROMETRE MINIMUM OVER NICKEL UNDERPLATE.

3. PRODUCT SPECIFICATION: PS-99020-0011

4. PACKAGING SPECIFICATION: FOR TAPE AND REEL SEE: PK-90816-006
   FOR TUBE SEE: PK-90816-007

5. MATES WITH MOLEX 90327 PART SERIES.

6. ALL SMT TAILS TO LIE WITHIN A COPLANARITY BAND
   OF 0 - 0.10 MICROMETRE REF. FROM EACH OTHER.

7. 4 CIRCUIT PART NOT AVAILABLE IN TAPE AND REEL.

LAST INSPECTION NUMBER USED: 20

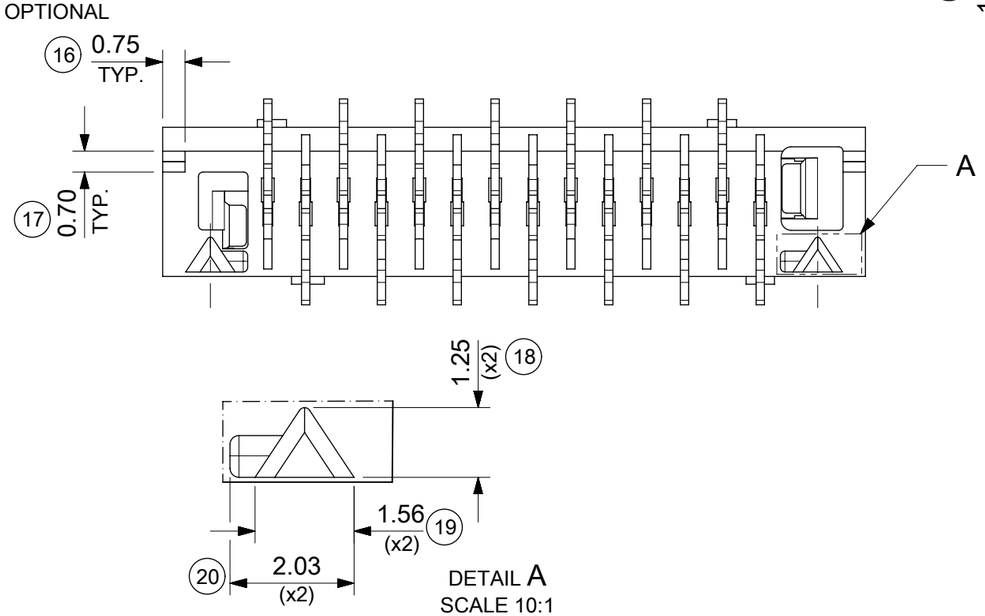

90816 - * * **

CIRCUIT SIZE.

	PCB PEGS	TUBE PACKED	TAPE & REEL PACKED
0	YES	YES	NO
2	YES	NO	YES
3	NO	YES	NO
5	NO	NO	YES

0 = TIN VERSION
3 = 0.76µm GOLD PLATING

DOCUMENT STATUS	P1	RELEASE DATE	2023/02/20 05:04:35

FORMAT: master-B-p100
REVISION: J
DATE: 2020/01/14

FUNCTIONAL SYMBOLS: FA = 0, FC = 0, FD = 0
DIVISIONAL SYMBOLS

THIS DRAWING CONTAINS INFORMATION THAT IS PROPRIETARY TO MOLEX ELECTRONIC TECHNOLOGIES, LLC AND SHOULD NOT BE USED WITHOUT WRITTEN PERMISSION

DIMENSION UNITS: mm
SCALE: 5:1
GENERAL TOLERANCES (UNLESS SPECIFIED)
ANGULAR TOL ± 2.0°
4 PLACES ±
3 PLACES ±
2 PLACES ± 0.25
1 PLACE ± 0.35
0 PLACES ±
DRAFT WHERE APPLICABLE MUST REMAIN WITHIN DIMENSIONS

CURRENT REV DESC: CAD MIGRATION
EC NO: 738955
DRWN: GOWTHP 2023/02/02
CHK'D: GOWTHP 2023/02/16
APPR: ISHWARG 2023/02/20
INITIAL REVISION:
DRWN: DBYRNES 2008/08/16
APPR: EFOLAN 2010/11/04

THIRD ANGLE PROJECTION | DRAWING: A3 | SERIES: 90816

molex

PICOFLEX SMT
LATCHED HEADER

PRODUCT CUSTOMER DRAWING

DOCUMENT NUMBER	DOC TYPE	DOC PART	REVISION
SD-90816-001	PSD	001	G1

MATERIAL NUMBER	CUSTOMER	SHEET NUMBER
SEE CHART	GENERAL MARKET	1 OF 2

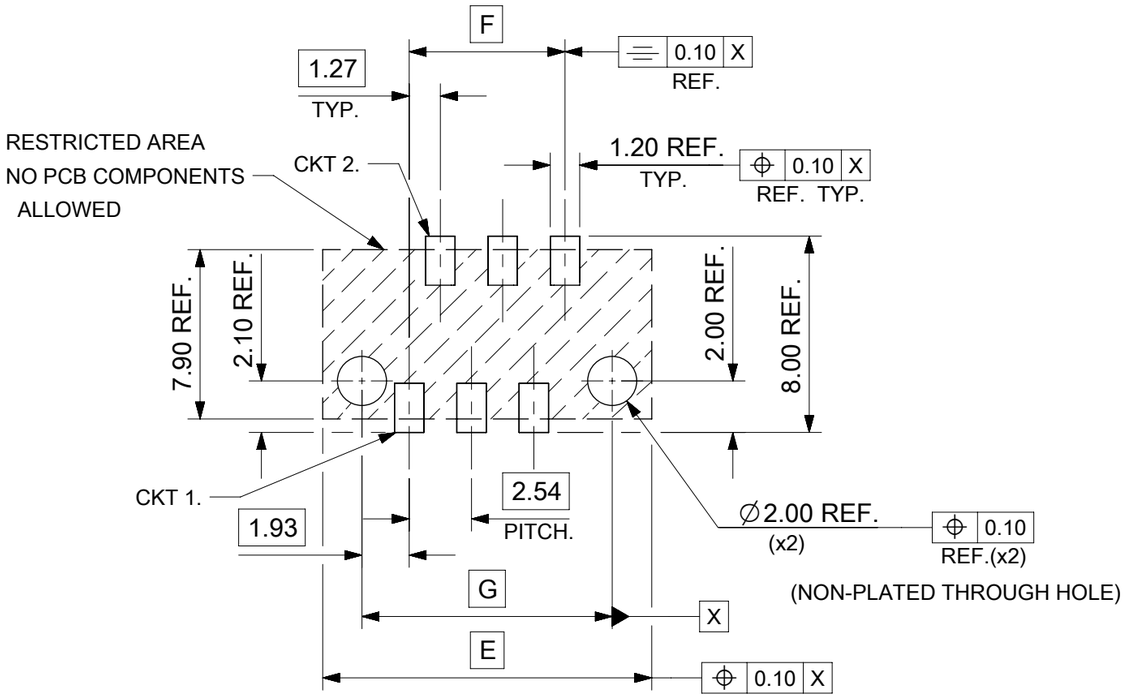

RECOMMENDED PCB THICKNESS 1.60±0.14

PCB LAYOUT FOR CLEARANCE FIT WITH PCB PEGS

HEADER VERSIONS 90816-*0**/*2**

VIEWED FROM COMPONENT SIDE

6CKT PART SHOWN FOR REFERENCE

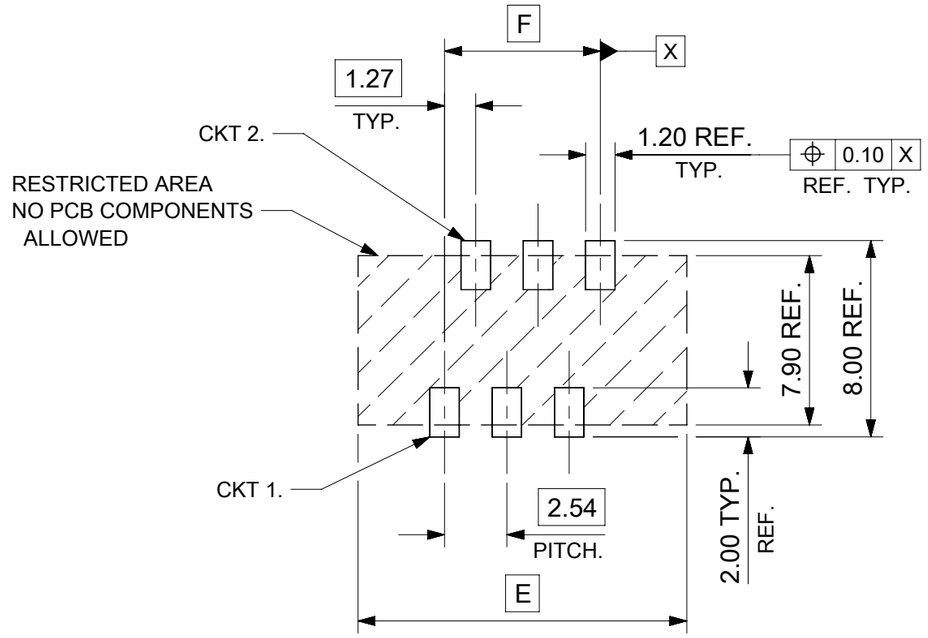

PCB LAYOUT WITHOUT PCB PEGS

HEADER VERSIONS 90816-*3**/*5**

VIEWED FROM COMPONENT SIDE

6CKT PART SHOWN FOR REFERENCE

PART NO.	NUMBER OF CKTS	DIM. E	DIM. F	DIM. G
90816-**26	26	38.80	31.75	35.60
90816-**24	24	36.26	29.21	33.06
90816-**22	22	33.72	26.67	30.52
90816-**20	20	31.18	24.13	27.98
90816-**18	18	28.64	21.59	25.44
90816-**16	16	26.10	19.05	22.90
90816-**14	14	23.56	16.51	20.36
90816-**12	12	21.02	13.97	17.82
90816-**10	10	18.48	11.43	15.28
90816-**08	8	15.94	8.89	12.74
90816-**06	6	13.40	6.35	10.20
90816-**04	4	10.86	3.81	7.66

DOCUMENT STATUS	P1	RELEASE DATE	2023/20/20 05:04:35

FORMAT: master-Sheet-A3
REVISION: J
DATE: 2020/01/14

THIS DRAWING CONTAINS INFORMATION THAT IS PROPRIETARY TO MOLEX ELECTRONIC TECHNOLOGIES, LLC AND SHOULD NOT BE USED WITHOUT WRITTEN PERMISSION

FUNCTIONAL SYMBOLS: A = 0, C = 0, P = 0

DIVISIONAL SYMBOLS

DIMENSION UNITS: mm — SCALE: 5:1

GENERAL TOLERANCES (UNLESS SPECIFIED)

ANGULAR TOL	±	2.0 °
4 PLACES	±	
3 PLACES	±	
2 PLACES	±	0.25
1 PLACE	±	0.35
0 PLACES	±	

DRAFT WHERE APPLICABLE MUST REMAIN WITHIN DIMENSIONS

CURRENT REV DESC: CAD MIGRATION

EC NO: 738955
DRWN: GOWTHP 2023/02/02
CHK'D: GOWTHP 2023/02/16
APPR: ISHWARG 2023/02/20

INITIAL REVISION:
DRWN: DBYRNES 2008/08/26
APPR: EFOLAN 2010/11/04

THIRD ANGLE PROJECTION | DRAWING: A3-SIZE | SERIES: 90816

molex

PICOFLEX SMT
LATCHED HEADER

PRODUCT CUSTOMER DRAWING

DOCUMENT NUMBER	DOC TYPE	DOC PART	REVISION
SD-90816-001	PSD	001	G1

MATERIAL NUMBER	CUSTOMER	SHEET NUMBER
SEE SHEET 1	GENERAL MARKET	2 OF 2