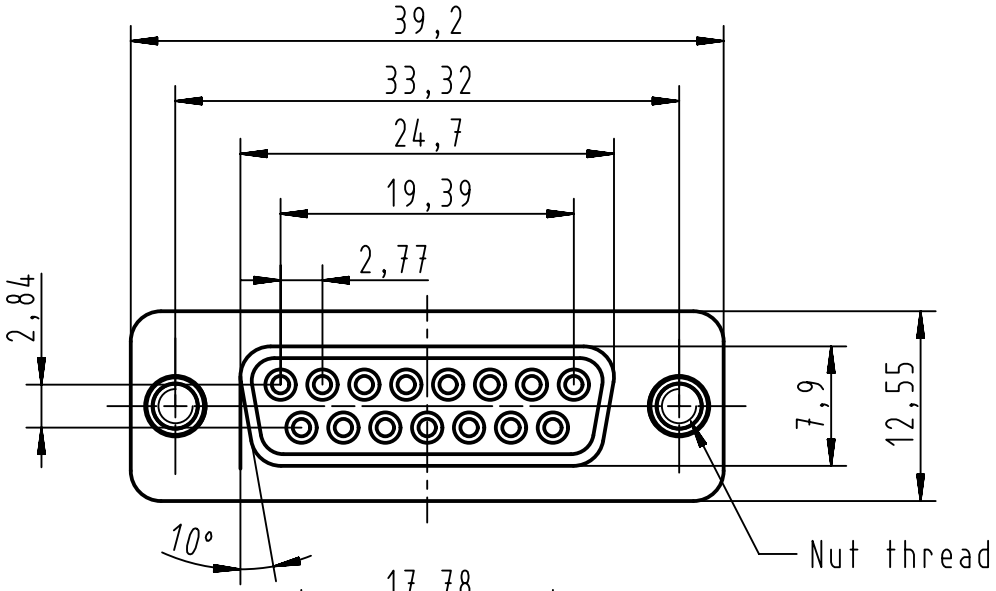

Recommended panel cutout dimensions
for rear mounting
According to CECC 75 301-802

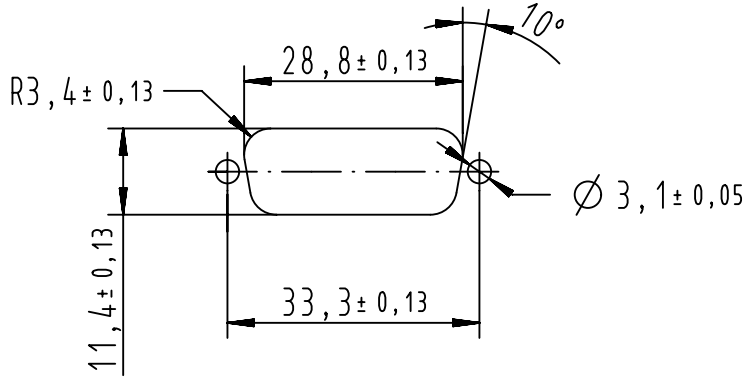

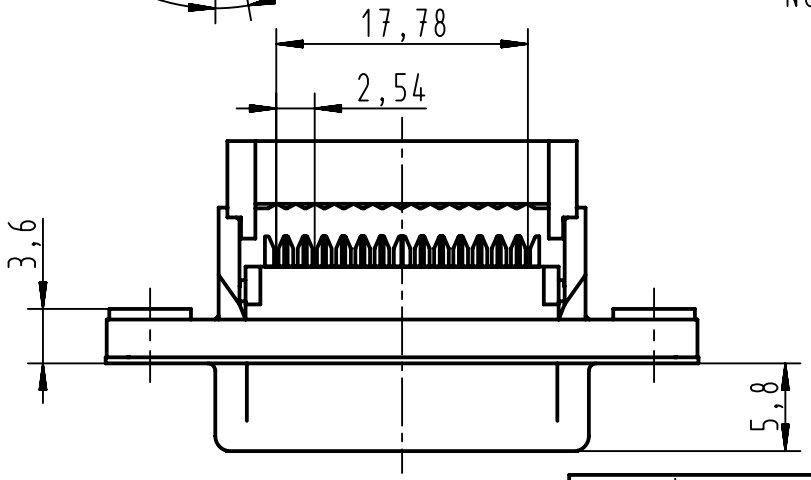

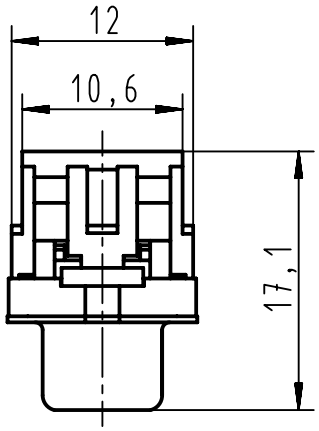

After closing cover

Part number	Performance level	Nut thread
09662187502	PL3	4-40UNC
09662186502	PL2	4-40UNC
09662187501	PL3	M3
09662186501	PL2	M3

All Dimensions in mm
Original Size DIN A4

All rights reserved

Department EC PD - FR

HARTING Electronics GmbH
D-32339 Espelkamp

Scale	Free size tol.	Ref.
2:1		Sub.

Created by	Inspected by	Standardisation	Date	State
DOUGE	BAGDIKIAN	HOFFMANN	2014-04-30	Final Release

Title: D-Sub IDC 15P female straight

Doc-Key / ECM-Nr.: 100527186/UGD/001/B 500000058439

Type: TB | Number: 0966218X50X | Rev.: B | Page: 1/1

A4