MICRO SWITCH
FREEPORT, ILLINOIS, U.S.A.
A DIVISION OF HONEYWELL
FED. MFG. CODE 91929

SWITCH-BASIC

CATALOG LISTING
V3-1119

CK-M1900

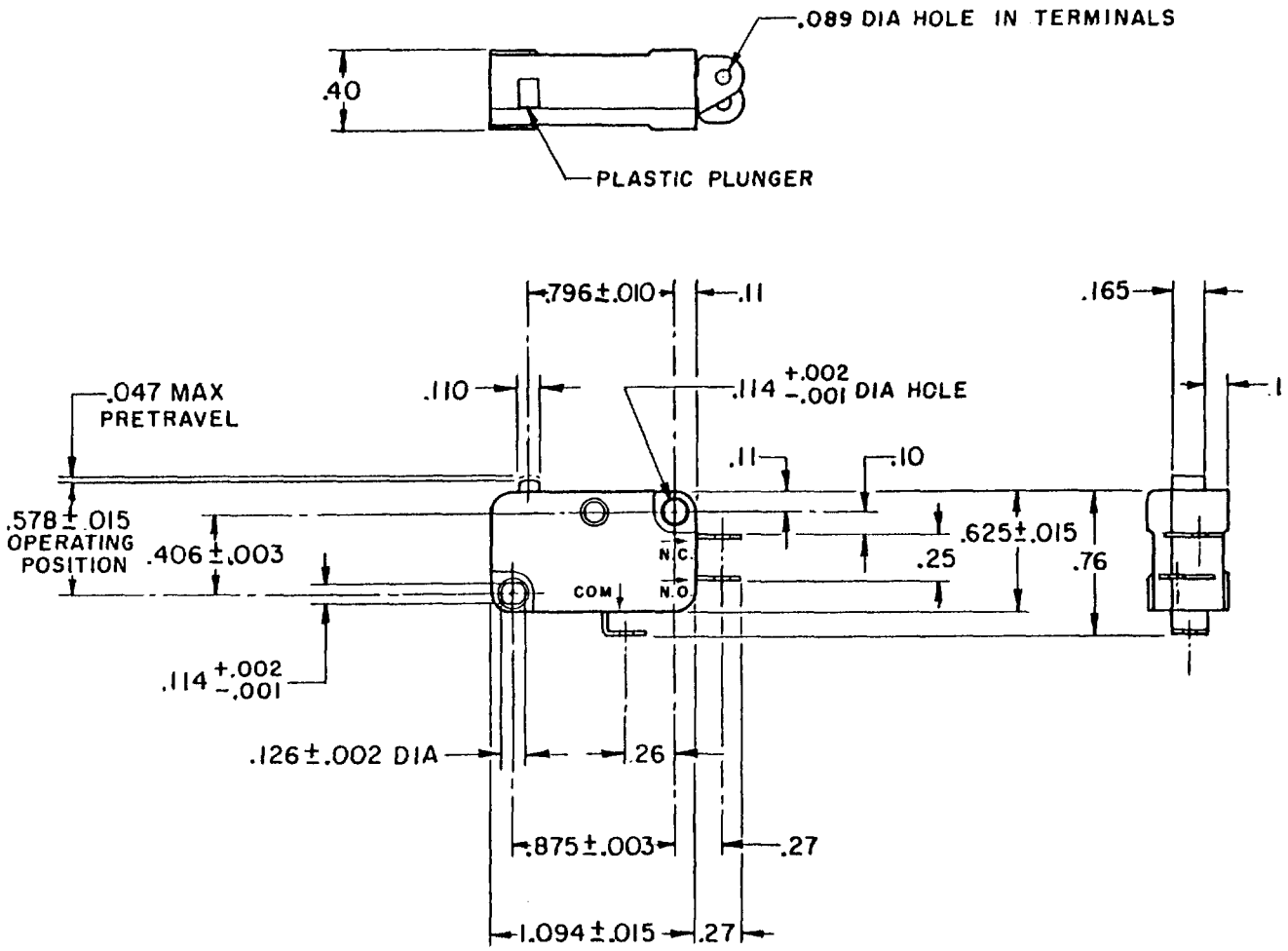

NOTE -
1 - TERMINALS ARE PLATED FOR SOLDERING
2 - CAUTION: DO NOT OVERTRAVEL PLUNGER WITH FORCE IN EXCESS OF FIVE POUNDS

THIS DRAWING COVERS A PROPRIETARY ITEM AND IS THE PROPERTY OF MICRO SWITCH, A DIVISION OF HONEYWELL. THIS DRAWING IS NOT TO BE COPIED OR USED WITHOUT THE APPROVAL OF MICRO SWITCH.

CHARACTERISTICS

OPERATING FORCE - - - - 75 GRAMS MAX
RELEASE TRAVEL - - - - - - - .010 MIN
RELEASE FORCE - - - - - - 10 GRAMS MIN
DIFFERENTIAL TRAVEL - - - - - .002-.010
OVERTRAVEL - - - - - - - - - - - .050 MIN
FREE POSITION - - - - - - - - - - .625 MAX

ELECTRICAL DATA

CONTACT ARRANGEMENT
S P D T

L112 10A 1/3HP 125 OR 250 VAC
1/2A 125 VDC, 1/4A 250 VDC
4A 125 VAC "L"

SCALE FULL
DO NOT SCALE PRINT

UNLESS OTHERWISE NOTED
DIMENSIONS ARE IN INCHES
TOLERANCES ARE:

ONE PLACE	(.0)	±.030
TWO PLACE	(.00)	±.015
THREE PLACE	(.000)	±.005
ANGLES		±

WEIGHT

DRAWING NUMBER V3-1119
PAGE 1 OF 1
RELEASE NO. SR 12447
REPLACES
ISSUE 5 M

REVISIONS
A C024699 M B S 29 JULY 69
B CO 39182 G A S 18 FEB 78
C C074635 K D R 10 MAY 93
D 200185 J J A 7 APR 00

DRAWN WEG 12 SEPT 66
CHECK LSD 2 Sep 66
CHECK BJ 21 Sep 66

FORMTEK
FC-50378