XC6218 Series

ETR0329-005

Low Power Supply LDO Regulators (Ultra Small Packages)

■ GENERAL DESCRIPTION

XC6218 series are highly precise, low noise, positive voltage LDO regulators manufactured using CMOS processes. The series achieves very low supply current, 1.0μ A (TYP.) and consists of a reference voltage source, an error amplifier, current limit circuit, and a phase compensation circuit plus a driver transistor.

Ultra small USP-3 and SSOT-24 packages make high density mounting possible. Therefore, the series is ideal for applications where high density mounting is required such as in mobile phones.

Output voltage is selectable in 0.1V increments within a range of 0.9V ~ 4.0V by laser trimming. The series is also compatible with low ESR ceramic capacitors (C_L), which give added output stability.

The current limiter's fold-back circuit also operates as a short protect for the output current limiter and the output pin.

■ APPLICATIONS

- Digital audio equipments
- Smart phones / Mobile phones
- Portable game consoles
- Digital still cameras / Camcorders
- Mobile devices / terminals

■ FEATURES

Maximum Output Current	: 200mA (300mA Limit: TYP.) (@VOUT=3.0V, VIN=4.0V)
Dropout Voltage	: 200mV@IOUT=100mA (@VOUT=3.0V)
Operating Voltage Range	: 1.5V ~ 6.0V
Output Voltage	: 0.9 ~ 4.0V (0.1V increments)
High Accuracy	: Setting Voltage Accuracy± 2% (1.5 < VOUT(T) ≦ 4.0V) Setting Voltage Accuracy± 30mV (0.9 ≦ VOUT(T) ≦ 1.5V)
Low Power Supply	: 1.0μ A (TYP.)
Operating Ambient Temperature	: - 40℃ ~ 85℃
External Capacitor	: 0.1μ F~1.0μ F
Packages	: USP-3, SSOT-24

■ TYPICAL APPLICATION CIRCUIT

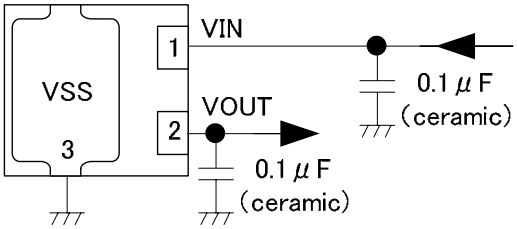

USP-3
(BOTTOM VIEW)

■ TYPICAL PERFORMANCE CHARACTERISTICS

- Supply Current vs. Input Voltage

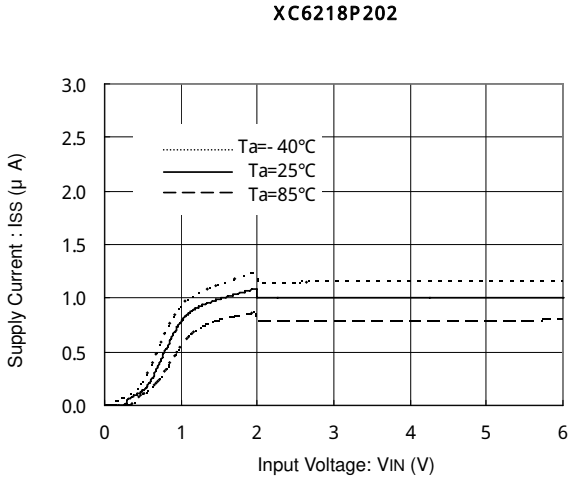

■ PIN CONFIGURATION

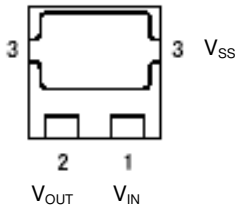

USP-3
(BOTTOM VIEW)

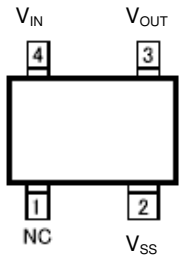

SSOT-24
(TOP VIEW)

■ PIN ASSIGNMENT

PIN NUMBER		PIN NAME	FUNCTION
USP-3	SSOT-24		
1	4	VIN	Power Supply
2	3	VOUT	Output
3	2	VSS	Ground
-	1	NC	No Connection

■ PRODUCT CLASSIFICATION

- Ordering Information

XC6218P①②③④⑤-⑥(*1)

DESIGNATOR	DESCRIPTION	SYMBOL	DESCRIPTION
①②	Output Voltage	09 ~ 40	Output voltage ± ②Ð represents value after the decimal point. ex.) 15 ⇒ ①:1, ②: 5 = 1.5V 33 ⇒ ①:3, ②: 3 = 3.3V
③	Output Voltage Accuracy	2	Output voltage accuracy less than ± 2%, 100mV increments ex.) 2.5V ⇒ ①=2, ②=5, ③=2
④⑤-⑥	Packages Taping Type (*2)	HR	USP-3
		HR-G	USP-3
		NR	SSOT-24
		NR-G	SSOT-24

(*1) The "-G" suffix indicates that the products are Halogen and Antimony free as well as being fully EU RoHS compliant.
(*2) The device orientation is fixed in its embossed tape pocket. For reverse orientation, please contact your local Torex sales office or representative. (Standard orientation: ④R-⑥, Reverse orientation: ④L-⑥)

■ BLOCK DIAGRAM

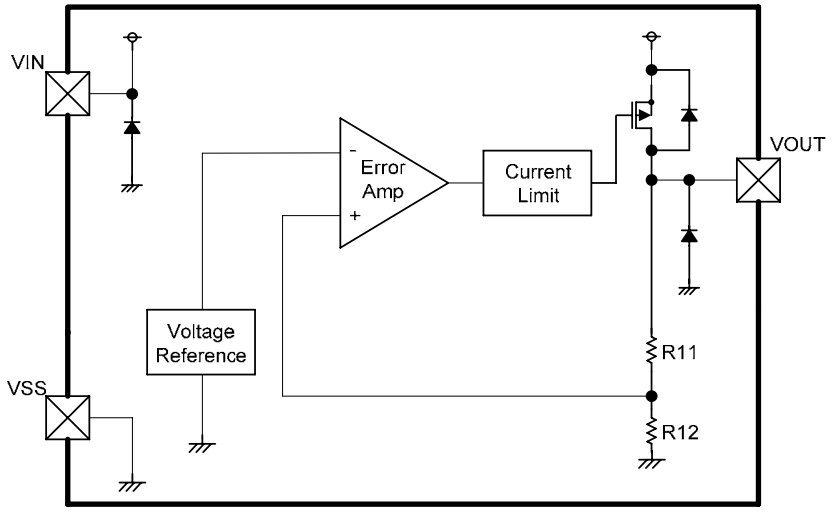

* The diode inside the circuit is a protection diode for the IC.

■ ABSOLUTE MAXIMUM RATINGS

Ta=25℃

PARAMETER		SYMBOL	RATINGS	UNITS
Input Voltage		V_{IN}	V_{SS} - 0.3 ~ 7.0	V
Output Current		I_{OUT}	500 (*1)	mA
Output Voltage		V_{OUT}	V_{SS} - 0.3 ~ V_{IN} + 0.3	V
Power Dissipation (*1)	USP-3	Pd	120	mW
	SSOT-24		150	
Operating Temperature Range		Topr	- 40 ~ + 85	℃
Storage Temperature Range		Tstg	- 55 ~ + 125	℃

*1: $I_{OUT} \leqq Pd / (V_{IN} - V_{OUT})$

■ ELECTRICAL CHARACTERISTICS

Ta=25℃

PARAMETER	SYMBOL	CONDITIONS	MIN.	TYP.	MAX.	UNITS	CIRCUIT
Output Voltage	$V_{OUT(E)}$ (*2)	$V_{IN}=V_{OUT(T)}$ (*1)+1.0V I_{OUT}=1mA	E-0 (*6)			V	①
Load Regulation	△Vload	0.9V ≦ $V_{OUT(T)}$ < 1.3V $V_{IN}=V_{OUT(T)}$+1.5V 1mA ≦ I_{OUT} ≦ 100mA	-	15	70	mV	①
		$V_{OUT(T)}$ ≧ 1.3V $V_{IN}=V_{OUT(T)}$+1.0V 1mA ≦ I_{OUT} ≦ 100mA					
Dropout Voltage1	Vdif1 (*3)	I_{OUT}=30mA	E-1 (*6)			mV	①
Dropout Voltage2	Vdif2 (*3)	I_{OUT}=100mA	E-1 (*6)			mV	①
Supply Current	I_{SS}	$V_{IN}=V_{OUT(T)}$+1.0V	-	1.0	5.0	μA	②
Line Regulation	△Vline	$V_{OUT(T)}$=0.9V 1.5V ≦ V_{IN} ≦ 6.0V I_{OUT}=1mA	-	0.05	0.15	%/V	①
		$V_{OUT(T)}$ ≧ 1.0V $V_{OUT(T)}$+0.5V ≦ V_{IN} ≦ 6.0V I_{OUT}=1mA					
Input Voltage	V_{IN}		1.5	-	6.0	V	-
Output Voltage Temperature Characteristics	$\frac{\triangle V_{OUT}}{\triangle V_{IN} \cdot V_{OUT}}$	$V_{IN}=V_{OUT(T)}$+1.0V I_{OUT}=1mA - 40℃ ≦ Topr ≦ 85℃	-	± 100	-	ppm/℃	①
Current Limit	Ilim	$V_{OUT}=V_{OUT(E)}$× 0.95 0.9 ≦ $V_{OUT(T)}$ ≦ 1.5V V_{IN}=2.6V	200	300	-	mA	①
		$V_{OUT}=V_{OUT(E)}$× 0.95 $V_{OUT(T)}$ ≧ 1.6V $V_{IN}=V_{OUT(T)}$+1.0V	250	300	-		
Short Circuit Current	Ishort	$V_{IN}=V_{OUT(T)}$+1.0V V_{OUT}=0V	-	50	-	mA	①

Notes:

*1 : $V_{OUT(T)}$: Setting output voltage value

*2 : $V_{OUT(E)}$: Effective output voltage value

(i.e. the output voltage when "($V_{OUT(T)}$ + 1.0V)" is provided at the V_{IN} pin while maintaining a certain I_{OUT} value.

*3 : Vdif = {V_{IN1}(*4) – V_{OUT1}(*5)}

*4 : V_{IN1} : The input voltage when V_{OUT1} appears as input voltage is gradually decreased.

*5 : V_{OUT1} : A voltage equal to 98% of the output voltage whenever an amply stabilized I_{OUT}($V_{OUT(T)}$+1.0V) is input.

*6 : Refer to the VOLTAGE CHART.

*7: $V_{OUT(T)}$ ≧ 1.5V → Accuracy ± 2.0%

$V_{OUT(T)}$ < 1.5V → MIN : $V_{OUT(T)}$ - 30mV, MAX : $V_{OUT(T)}$ + 30mV.

■ VOLTAGE CHART

Ta=25℃

PARAMETER / SETTING VOLTAGE	E-0		E-1			
	OUTPUT VOLTAGE 2.0% (V)		DROPOUT VOLTAGE 1 (mV)		DROPOUT VOLTAGE 2 (mV)	
$V_{OUT(T)}$	$V_{OUT(E)}$		Vdif1		Vdif2	
	MIN.	MAX.	TYP.	MAX.	TYP.	MAX.
0.9	0.870	0.930	460	900	850	1450
1.0	0.970	1.030	370	760	750	1300
1.1	1.070	1.130	300	650	680	1190
1.2	1.170	1.230	240	540	600	1070
1.3	1.270	1.330	190	420	530	950
1.4	1.370	1.430	160	340	470	840
1.5	1.470	1.530				
1.6	1.568	1.632				
1.7	1.666	1.734	110	200	350	610
1.8	1.764	1.836				
1.9	1.862	1.938				
2.0	1.960	2.040	90	150	290	480
2.1	2.058	2.142				
2.2	2.156	2.244				
2.3	2.254	2.346				
2.4	2.352	2.448				
2.5	2.450	2.550	70	120	240	370
2.6	2.548	2.652				
2.7	2.646	2.754				
2.8	2.744	2.856				
2.9	2.842	2.958				
3.0	2.940	3.060	60	100	200	320
3.1	3.038	3.162				
3.2	3.136	3.264				
3.3	3.234	3.366				
3.4	3.332	3.468				
3.5	3.430	3.570				
3.6	3.528	3.672				
3.7	3.626	3.774				
3.8	3.724	3.876				
3.9	3.822	3.978				
4.0	3.920	4.080				

■ TEST CIRCUITS

- Circuit ①

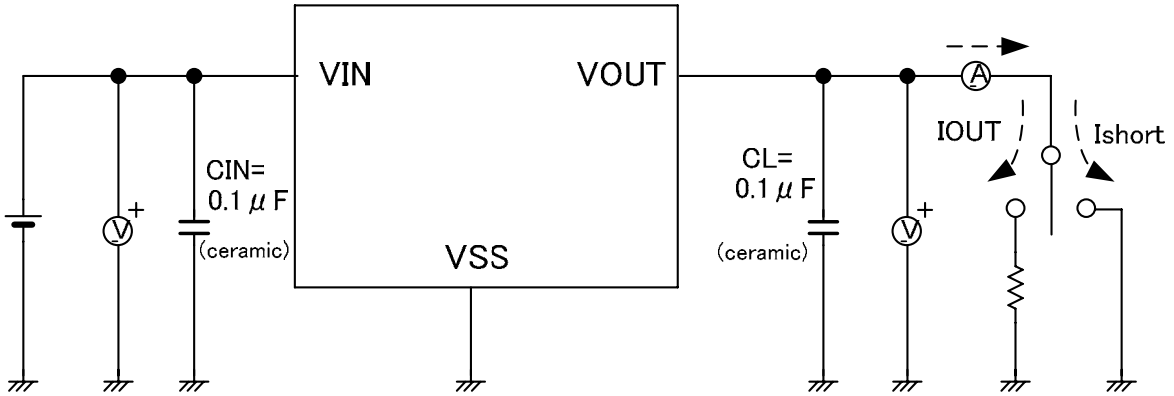

- Circuit ②

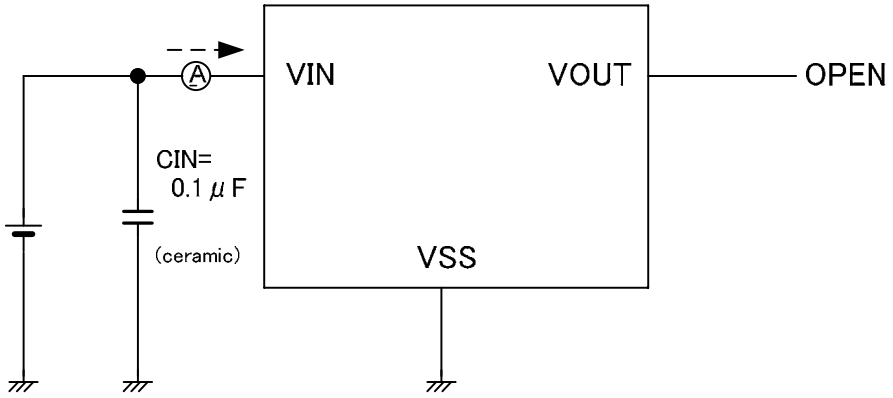

■ OPERATIONAL EXPLANATION

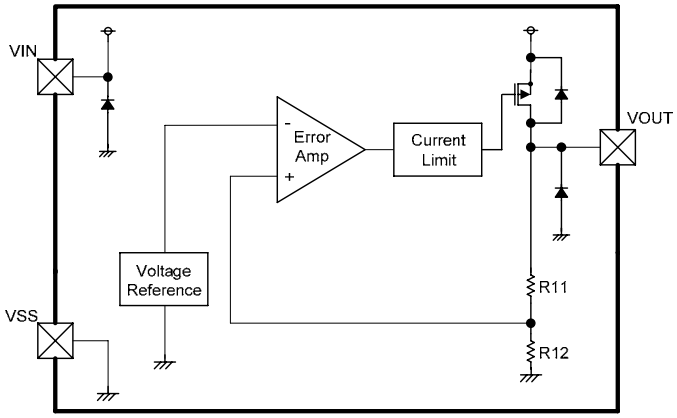

<Output Voltage Regulator Control>
The XC6218 series consists of a reference voltage source, an error amplifier, current limit circuit, and a phase compensation circuit plus a driver transistor. The voltage, divided by resistors R11 & R12, which are connected to the VOUT pin is compared with the internal reference voltage by the error amplifier. The P-channel MOSFET, which is connected to the VOUT pin, is then driven by the subsequent output signal. The output voltage at the VOUT pin is controlled & stabilized by negative feedback. The current limit circuit and short circuit protection operate in relation to the level of output current.

<Current Limit, Short-Circuit Protection>
The XC6218 series includes a current limit circuit, which aid the operations of the current limiter and short-circuit protection. When the load current reaches the current limit level (300mA, TYP.), the current limiter circuit operates and output voltage drops. The circuit operates to decrease the current limit as the load impedance decreases further and the output voltage drops. When the output pin is shorted, a current of about 50mA flows.

■ NOTES ON USE

1. Please use this IC within the stated absolute maximum ratings. The IC is liable to malfunction should the ratings be exceeded.
2. Where wiring impedance is high, operations may become unstable due to noise and/or phase lag depending on output current.
3. The XC6218 series oscillates normally even without an input capacitor, CIN, or an output capacitor, CL, because the series compensates by the phase compensation circuit. However, when an input wiring is long, about 0.1μF to 1.0μF of the input capacitor, CIN, is required for stabilizing input. When an under-shoot or over-shoot is large at transient response, about 0.1μF to 1.0μF of output capacitor, which prevents output fluctuation occurred by load fluctuation, is also recommended. Please wire the input capacitor (CIN) and the output capacitor (CL) as close to the IC as possible. Please wire the input capacitor (CIN) and the output capacitor (CL) as close to the IC as possible.
4. When the input voltage starts from 0V, over-shoot may occur because of the slope of the input rising. In order to avoid the over-shoot, please use the IC by setting the slope of the input rising within 0.1V/ms.

■ TYPICAL PERFORMANCE CHARACTERISTICS

(1) Output Voltage vs. Output Current

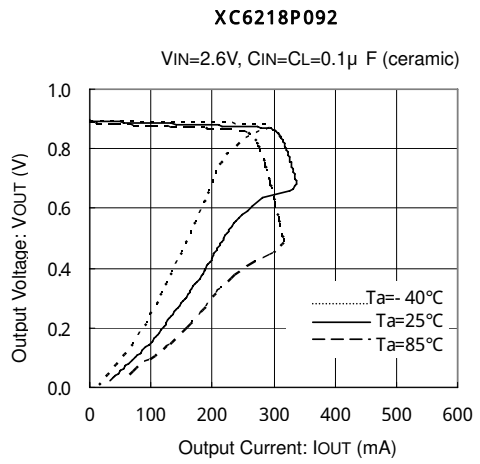

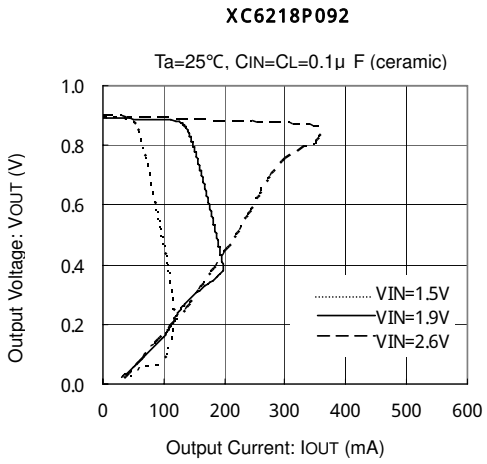

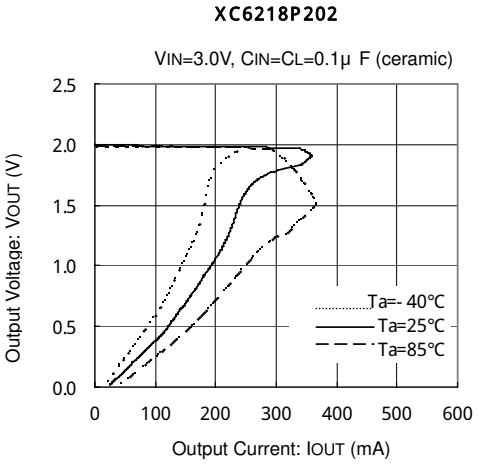

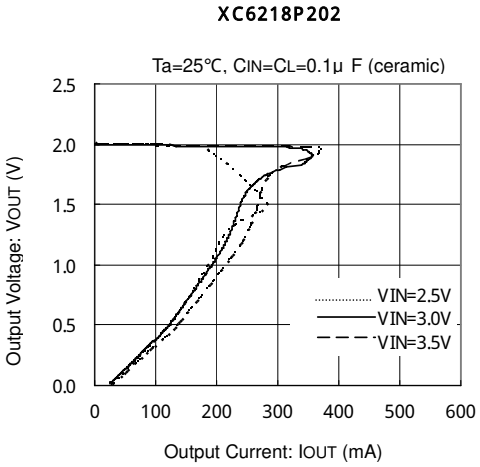

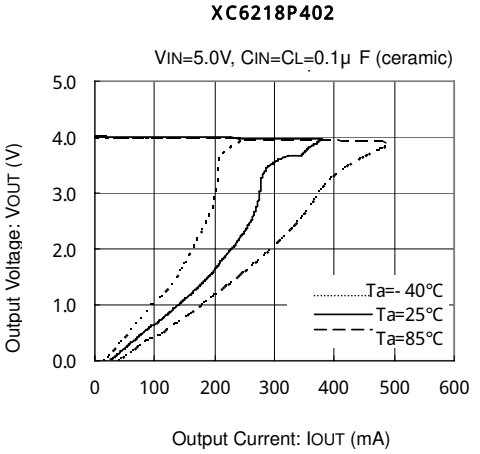

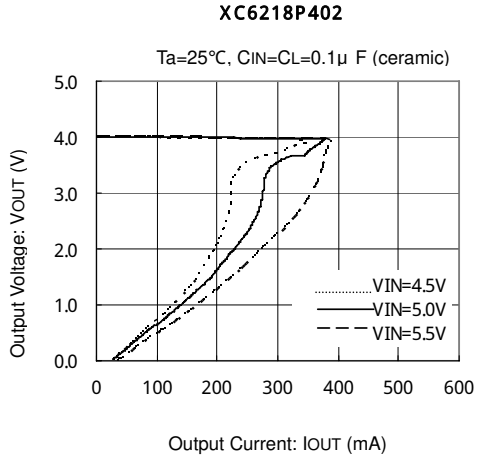

■ TYPICAL PERFORMANCE CHARACTERISTICS (Continued)

(2) Output Voltage vs. Input Voltage

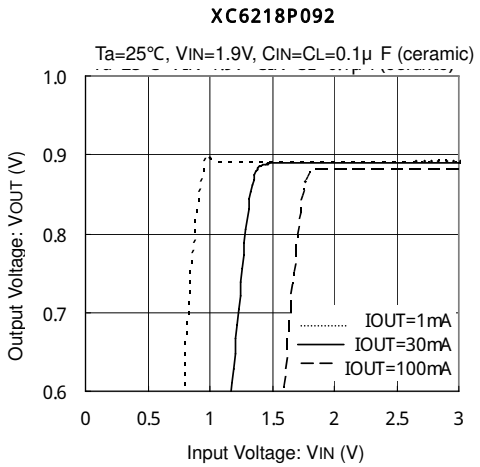

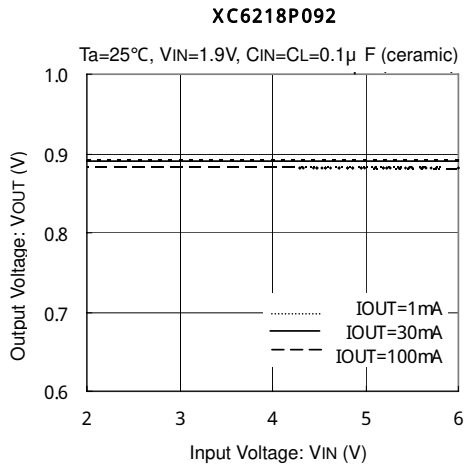

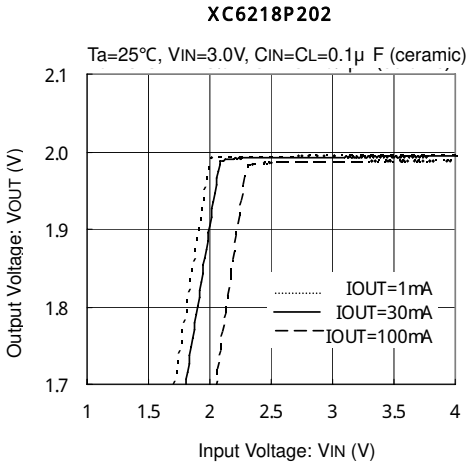

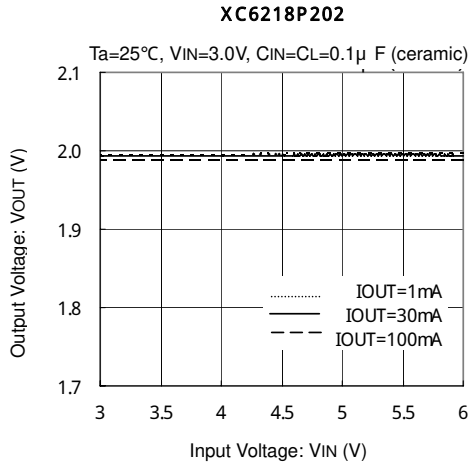

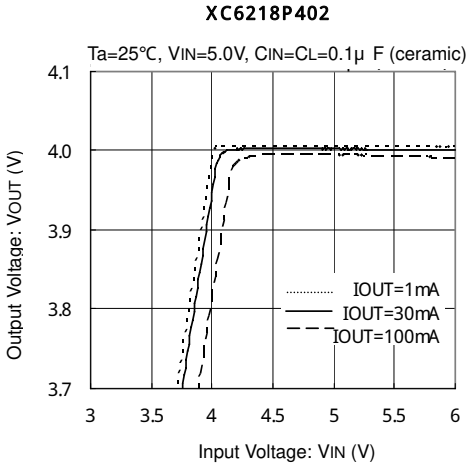

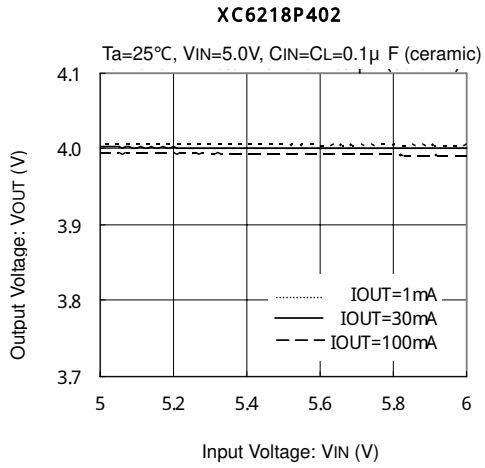

■ TYPICAL PERFORMANCE CHARACTERISTICS (Continued)

(3) Dropout Voltage vs. Output Current

(4) Supply Current vs. Input Voltage

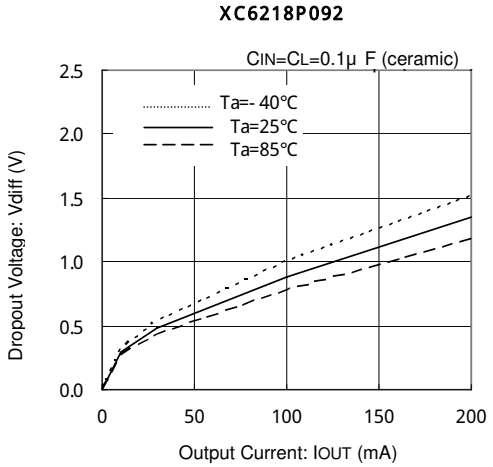

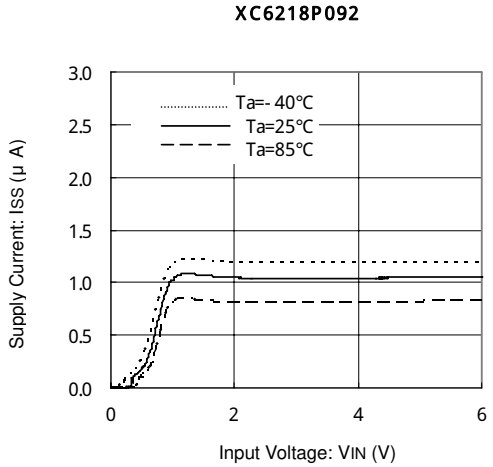

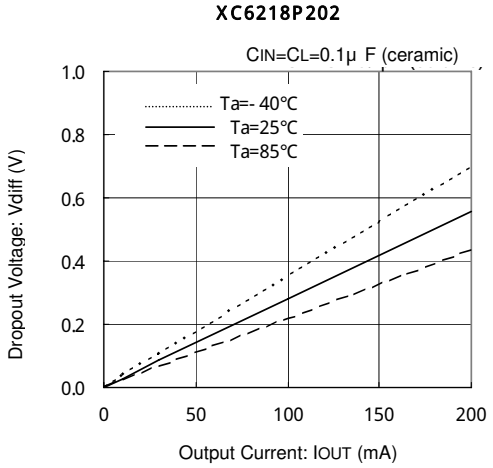

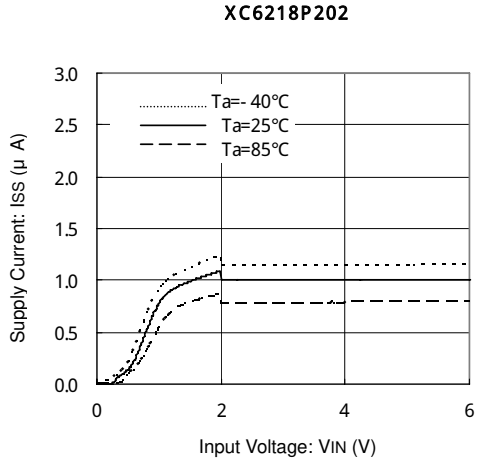

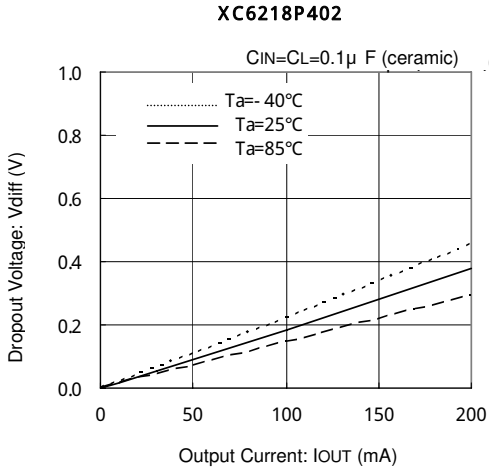

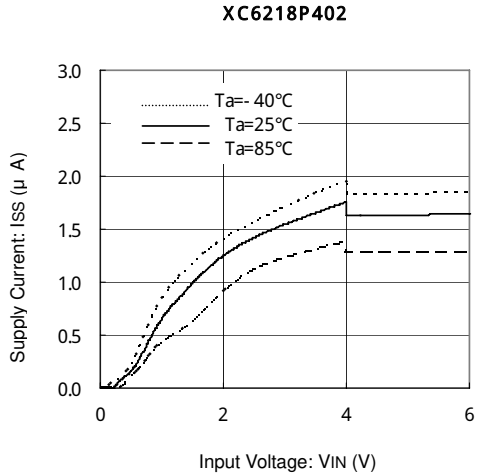

■ TYPICAL PERFORMANCE CHARACTERISTICS (Continued)

(5) Output Voltage vs. Ambient Temperature

(6) Supply Current vs. Ambient Temperature

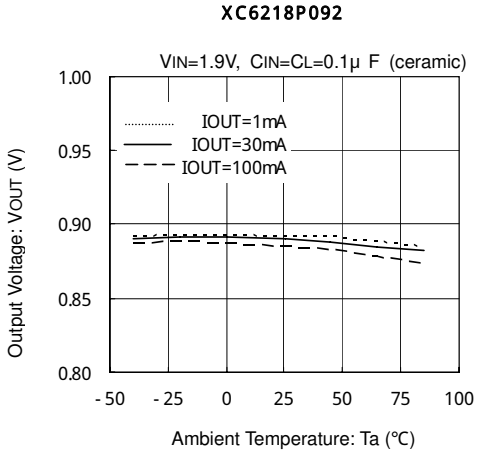

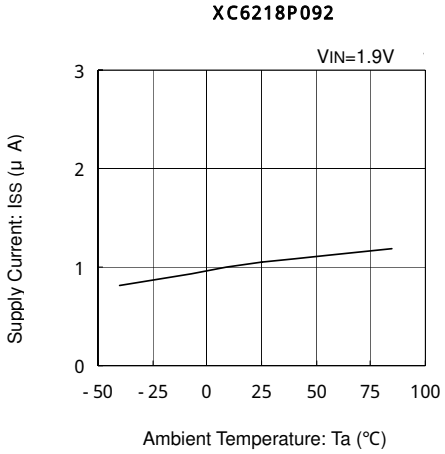

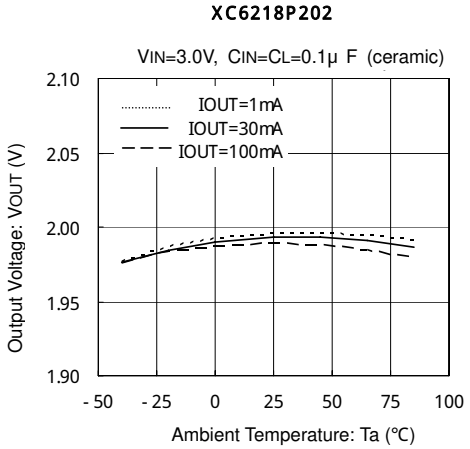

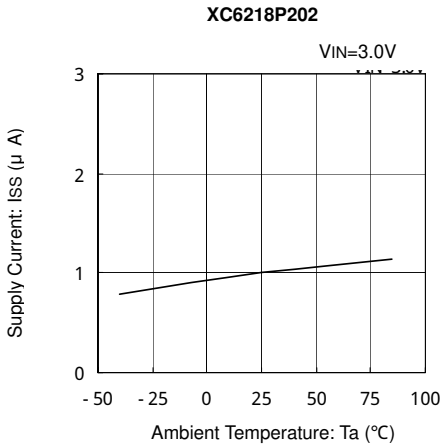

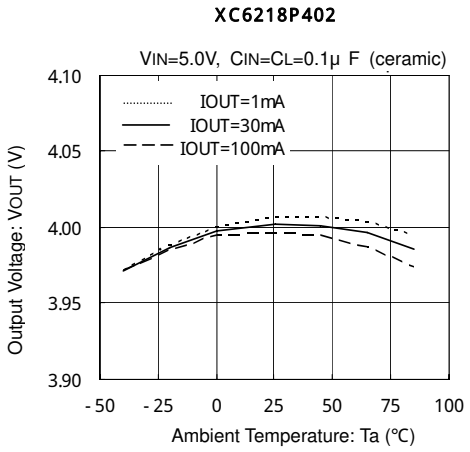

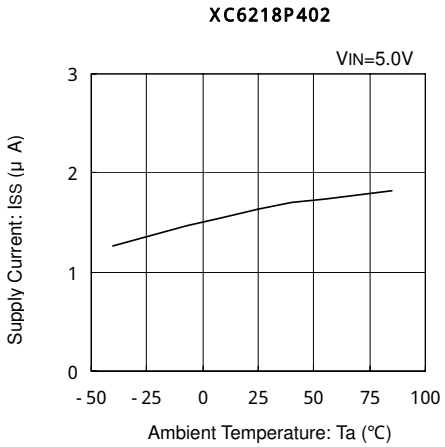

■ TYPICAL PERFORMANCE CHARACTERISTICS (Continued)

(7) Input Transient Response

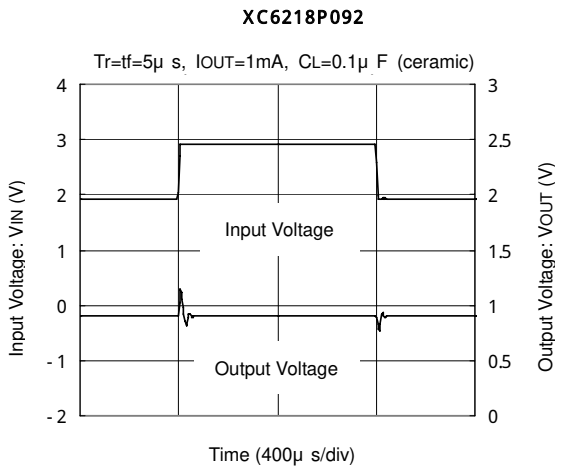

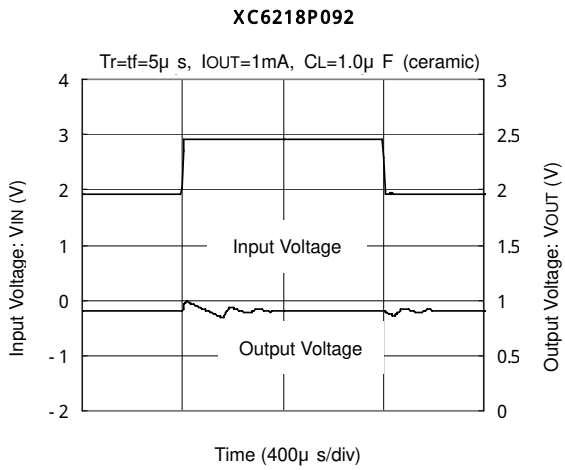

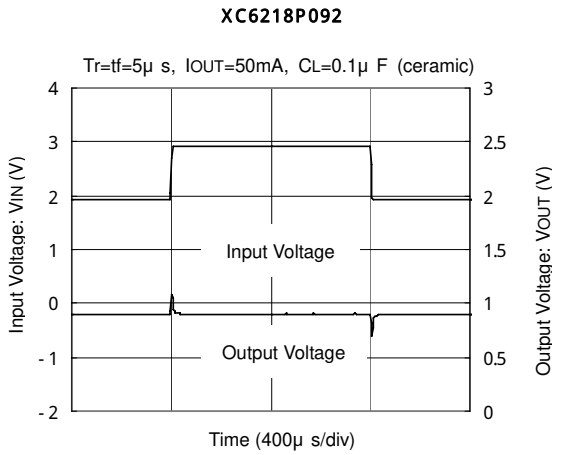

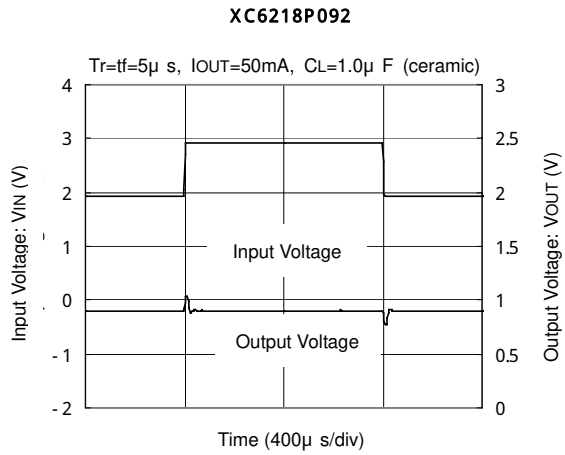

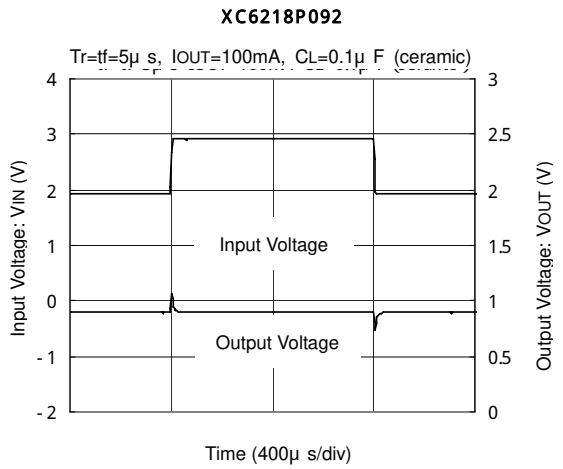

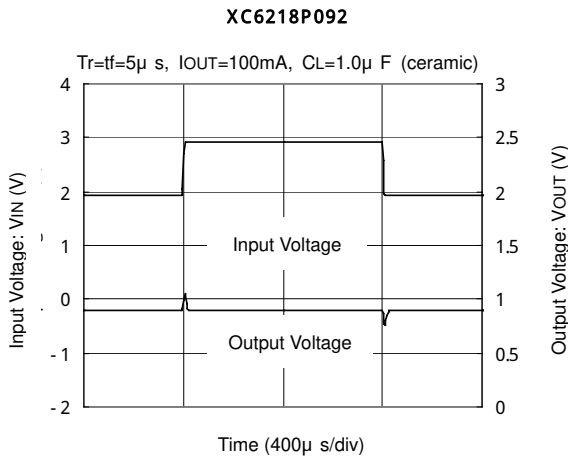

■ TYPICAL PERFORMANCE CHARACTERISTICS (Continued)

(7) Input Transient Response (Continued)

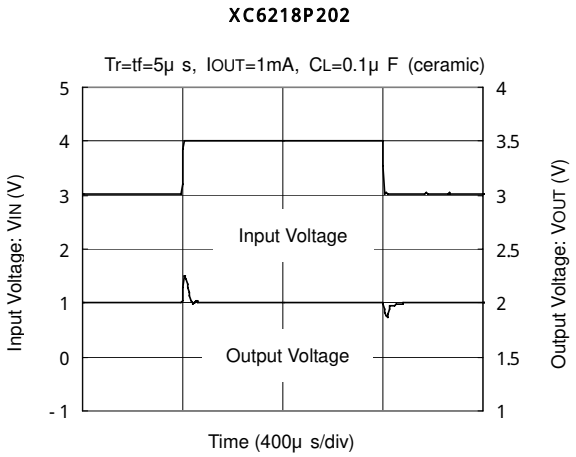

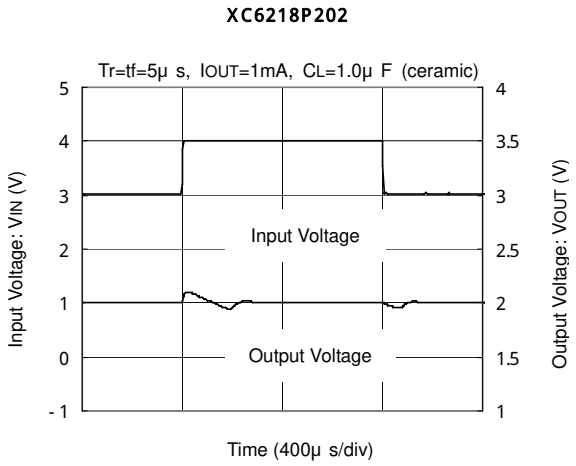

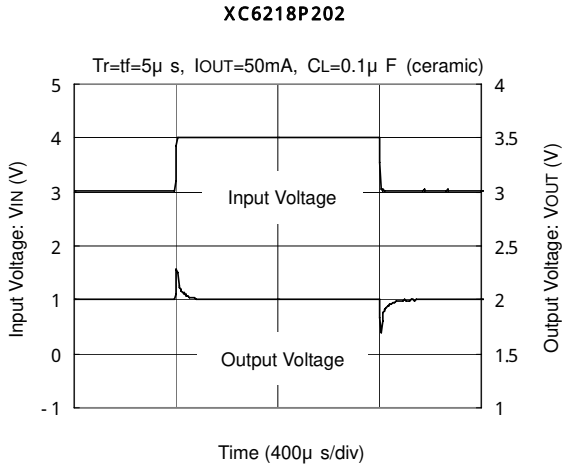

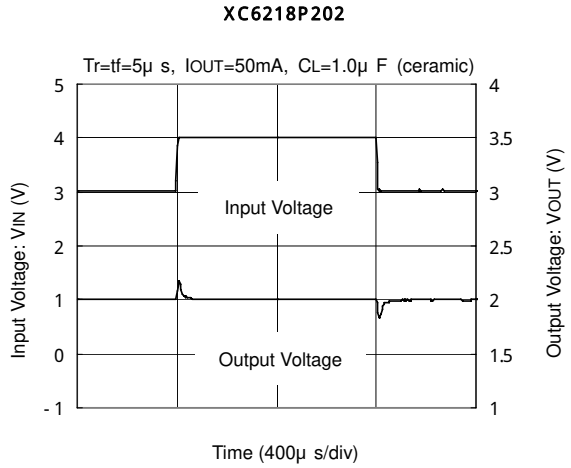

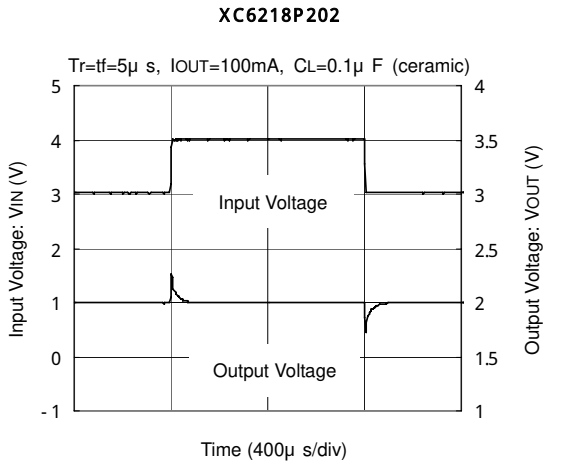

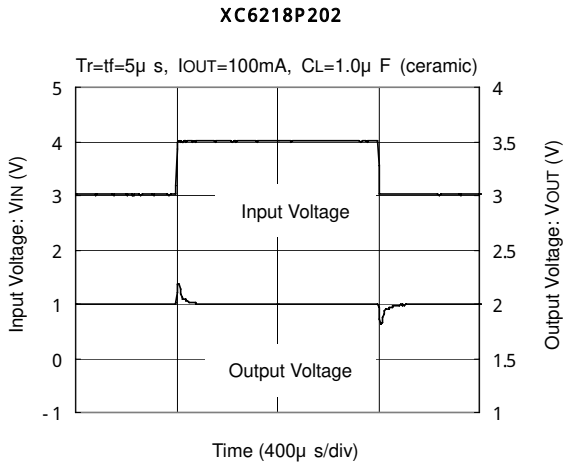

■ TYPICAL PERFORMANCE CHARACTERISTICS (Continued)

(7) Input Transient Response (Continued)

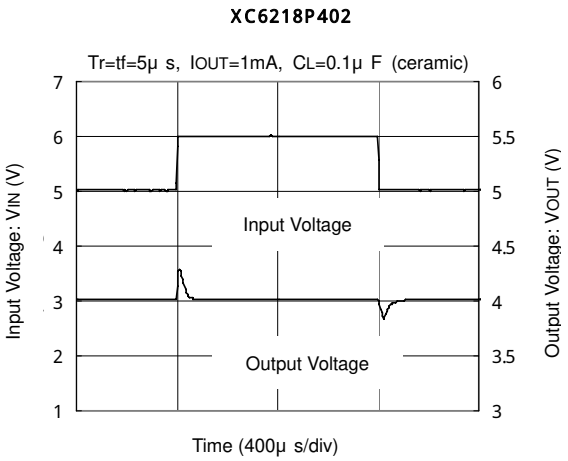

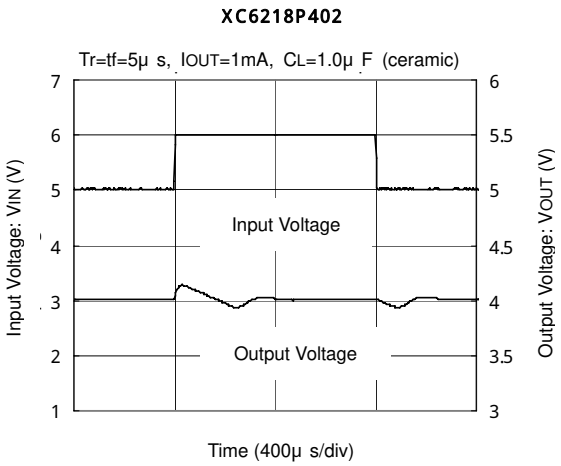

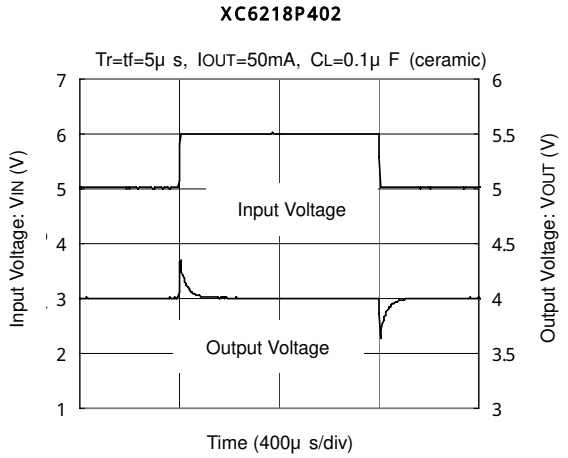

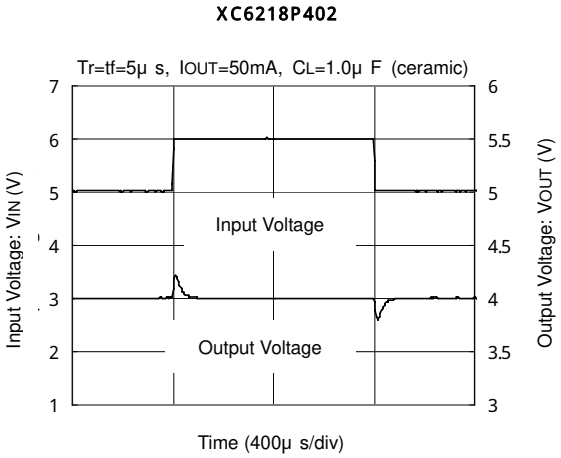

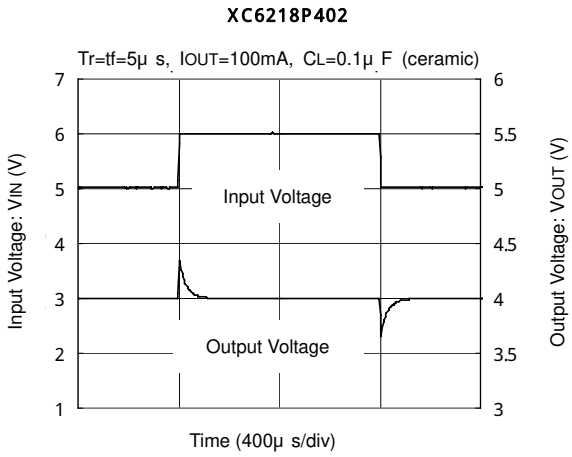

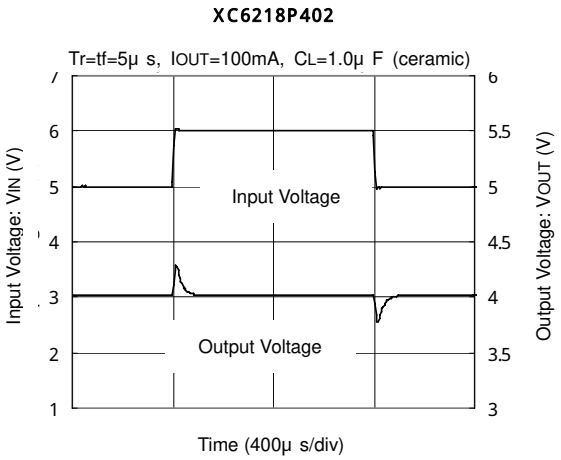

■ TYPICAL PERFORMANCE CHARACTERISTICS (Continued)

(8) Load Transient Response

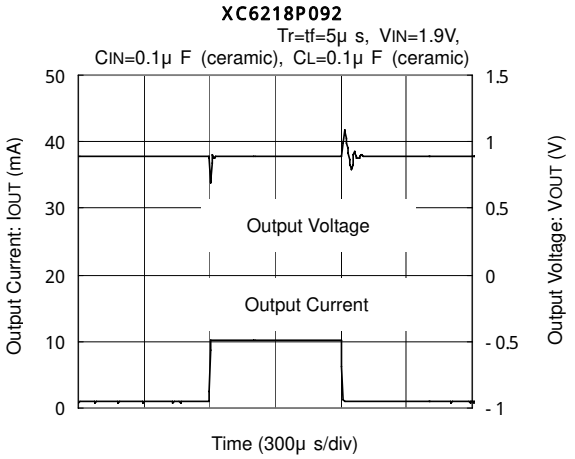

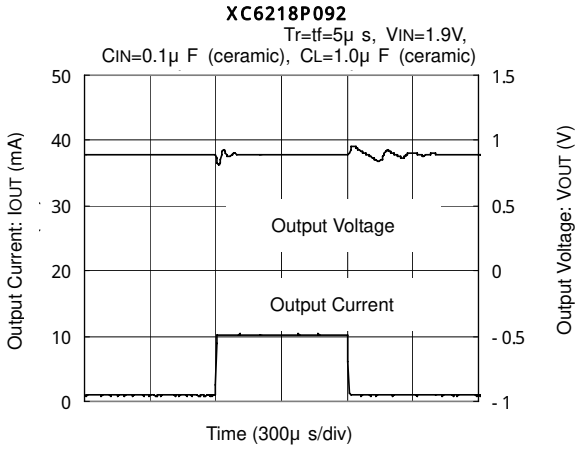

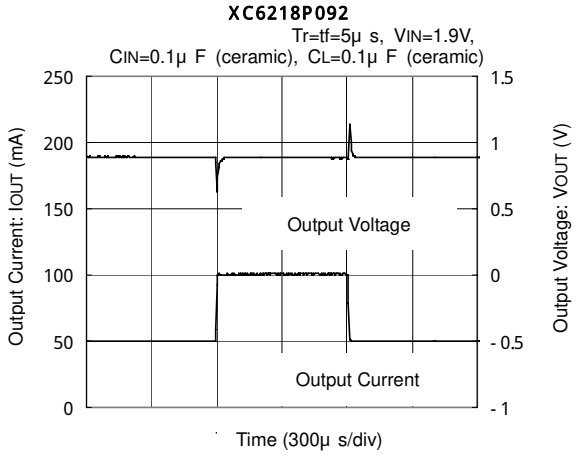

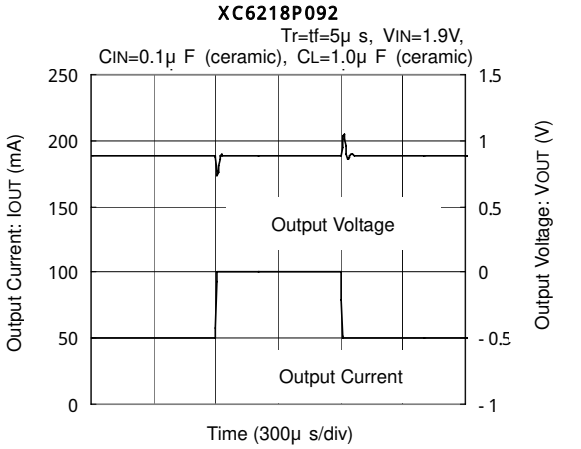

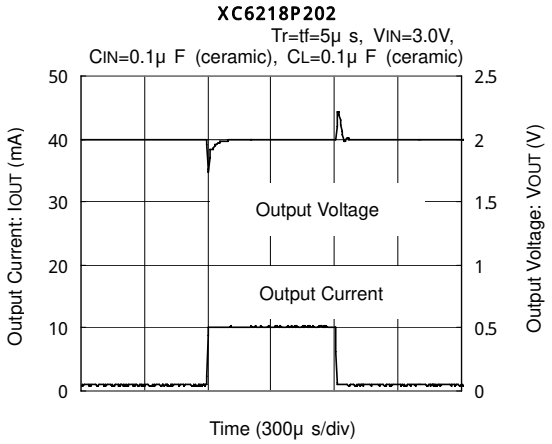

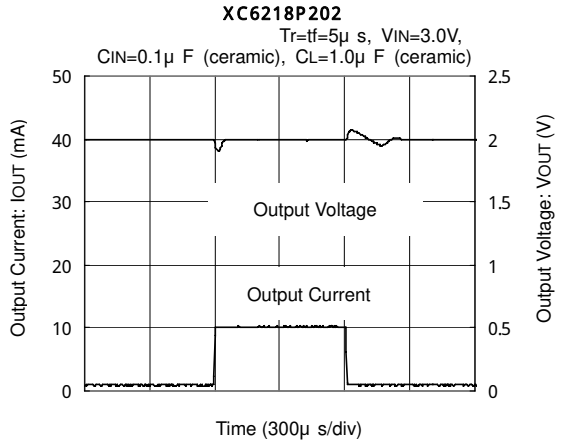

■ TYPICAL PERFORMANCE CHARACTERISTICS (Continued)

(8) Load Transient Response (Continued)

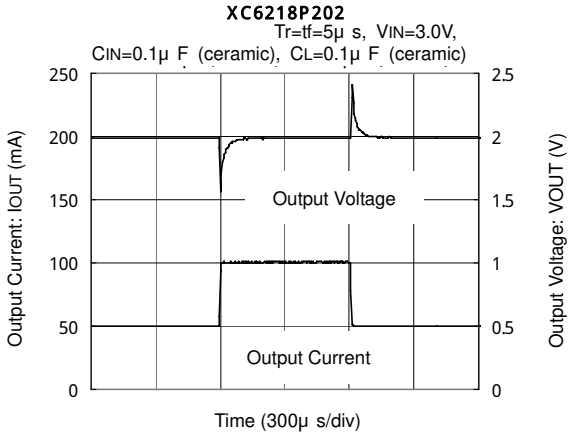

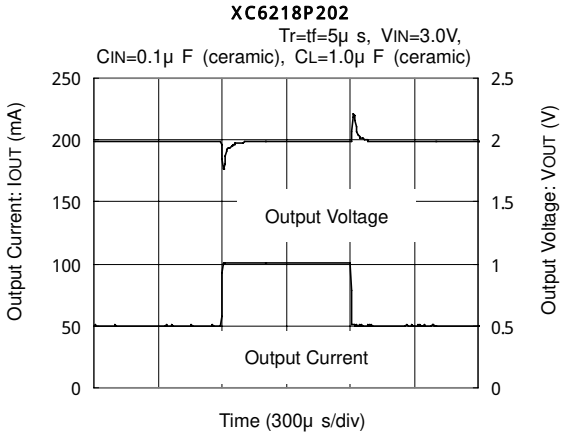

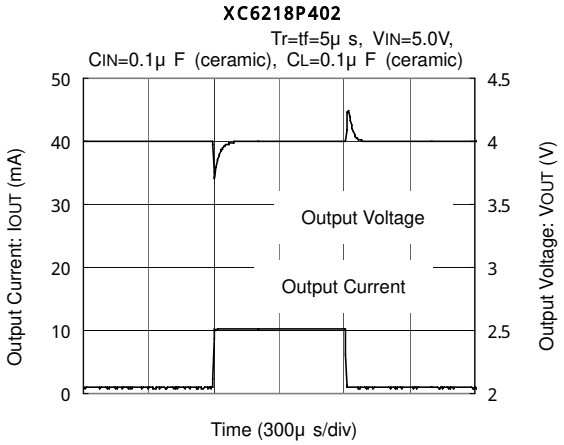

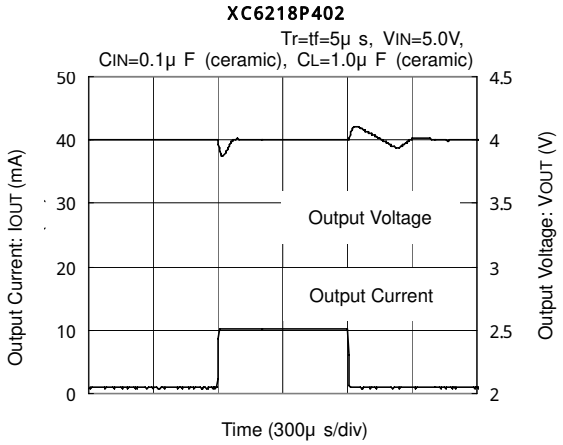

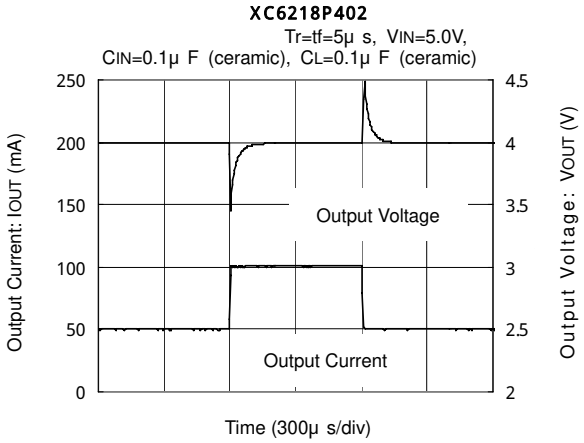

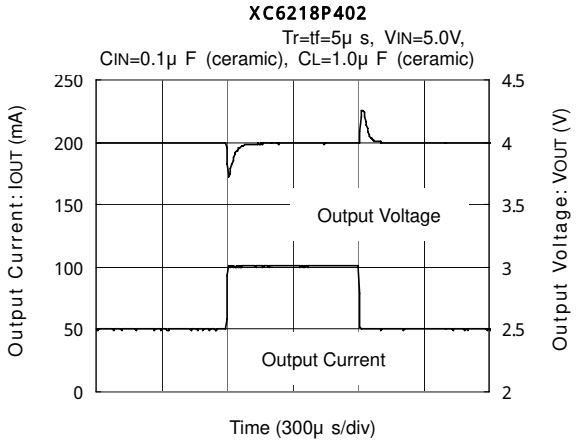

■ TYPICAL PERFORMANCE CHARACTERISTICS (Continued)

(9) Input Turn-On Transient Response

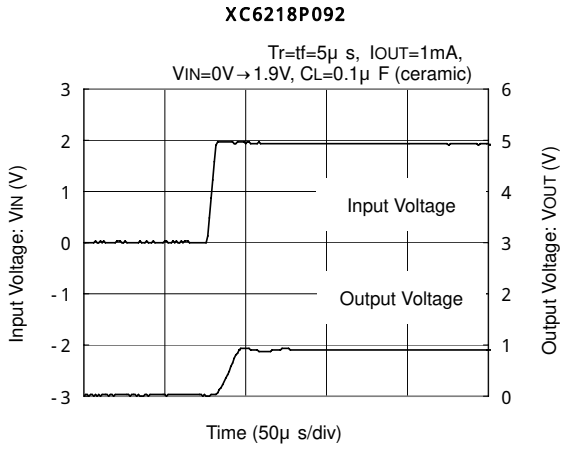

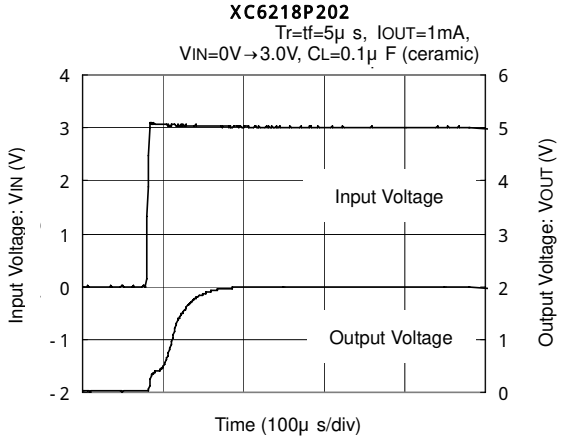

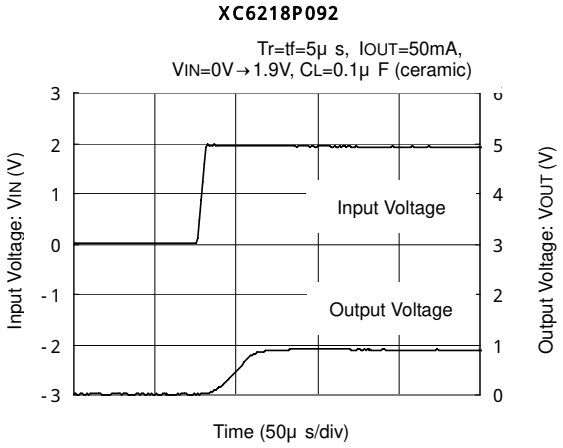

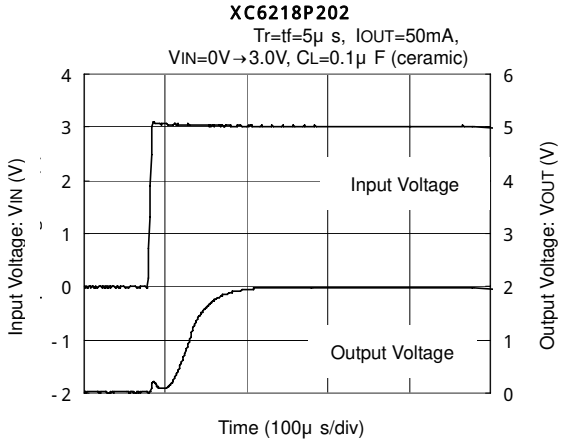

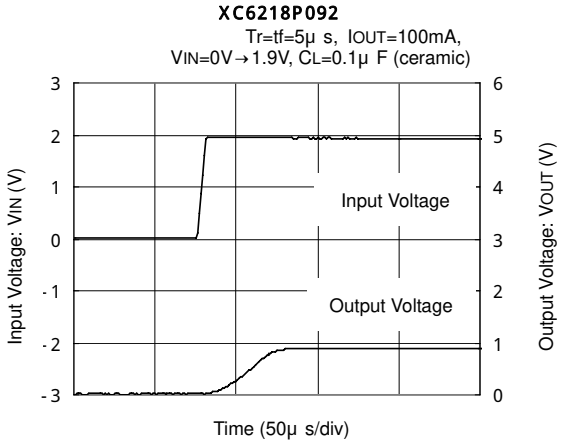

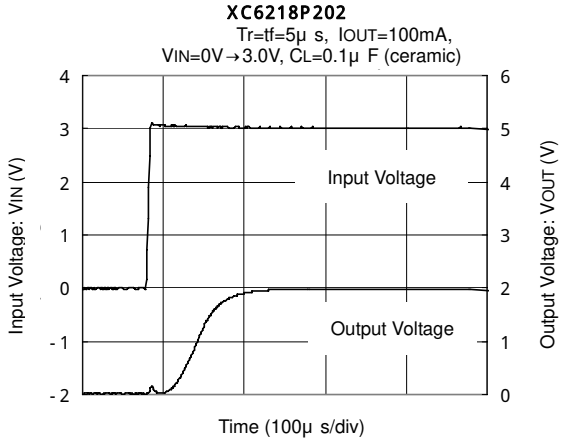

■ TYPICAL PERFORMANCE CHARACTERISTICS (Continued)

(9) Input Turn-On Transient Response (Continued)

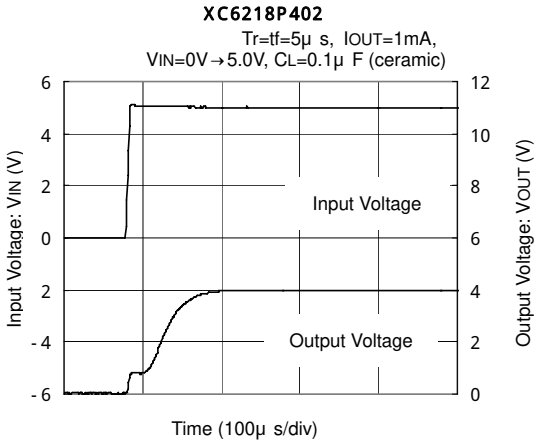

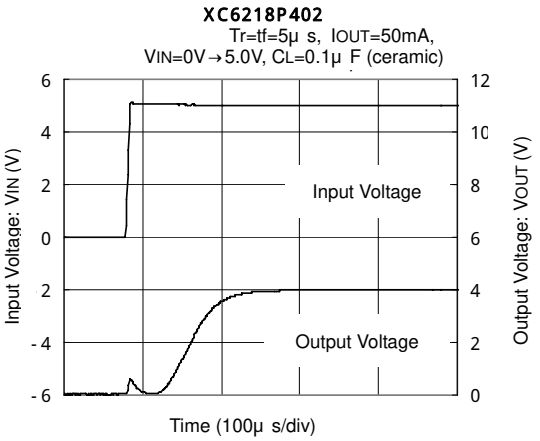

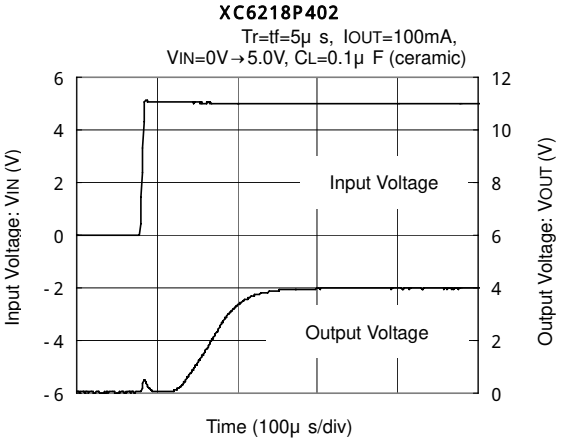

(10) Ripple Rejection Rate

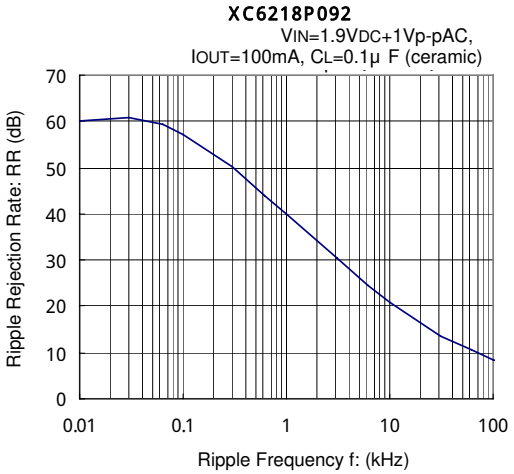

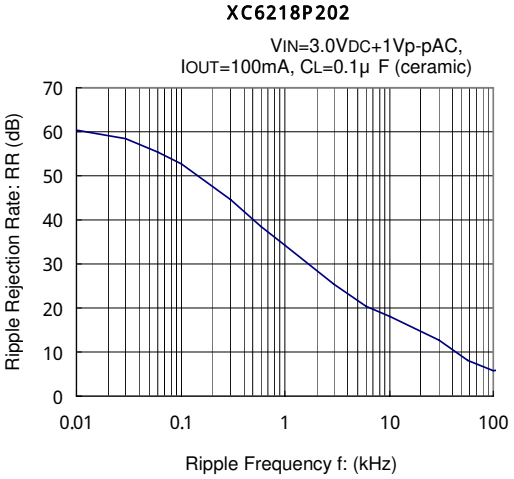

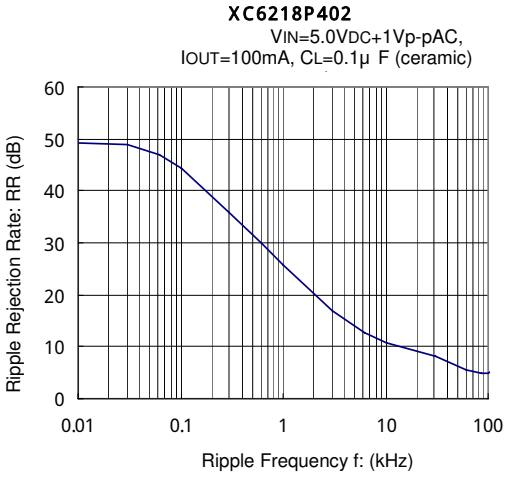

■ PACKAGING INFORMATION

- USP-3

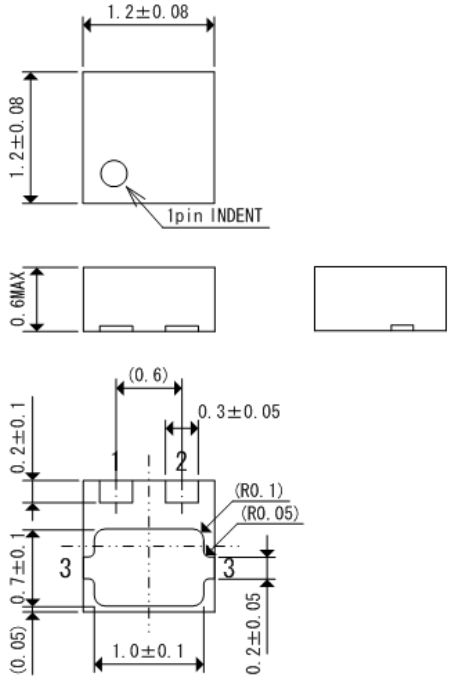

- SSOT-24

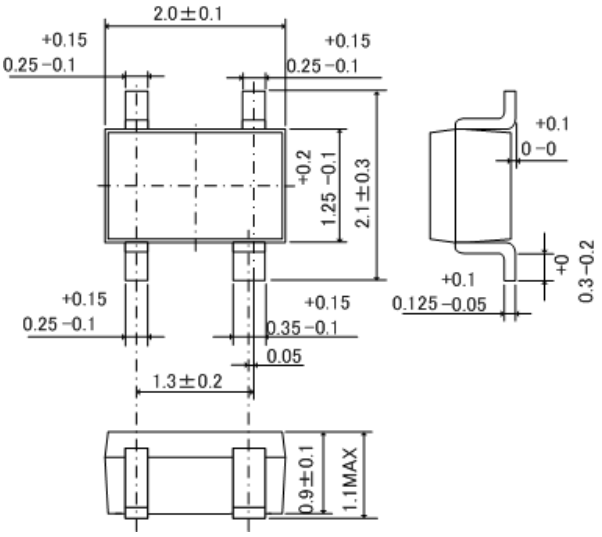

- USP-3 Reference Pattern Layout

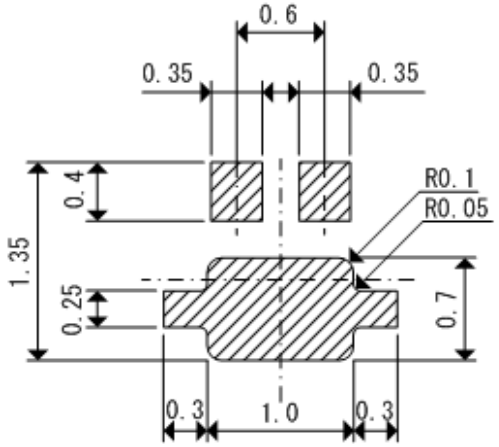

- USP-3 Reference metal mask design

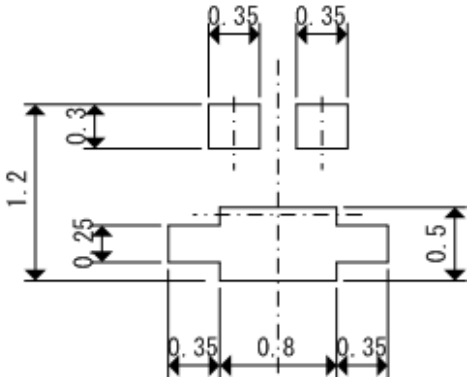

■ MARKING RULE

- SSOT-24

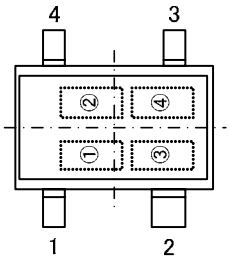

SSOT-24
(TOP VIEW)

① represents type of regulator and output voltage range

MARK	OUTPUT VOLTAGE RANGE	PRODUCT SERIES
P	0.9V ~ 3.0V	XC6218P*****
R	3.1V ~ 4.0V	

② represents the decimal point of output voltage

MARK	OUTPUT VOLTAGE (V)			MARK	OUTPUT VOLTAGE(V)		
0	-	3.1	-	F	1.6	-	-
1	-	3.2	-	H	1.7	-	-
2	-	3.3	-	K	1.8	-	-
3	-	3.4	-	L	1.9	-	-
4	-	3.5	-	M	2.0	-	-
5	-	3.6	-	N	2.1	-	-
6	-	3.7	-	P	2.2	-	-
7	-	3.8	-	R	2.3	-	-
8	0.9	3.9	-	S	2.4	-	-
9	1.0	4.0	-	T	2.5	-	-
A	1.1	-	-	U	2.6	-	-
B	1.2	-	-	V	2.7	-	-
C	1.3	-	-	X	2.8	-	-
D	1.4	-	-	Y	2.9	-	-
E	1.5	-	-	Z	3.0	-	-

③, ④ represents production lot number
0 to 9, A to Z repeated (G, I, J, O, Q, W, excluded)
*No character inversion used.

■ MARKING RULE (Continued)

- USP-3

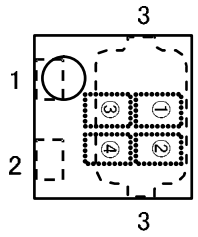

USP-3
(TOP VIEW)

① represents product series

MARK	PRODUCT SERIES
T	XC6218P******

② represents output voltage range

MARK	OUTPUT VOLTAGE RANGE	PRODUCT SERIES
7	0.9V ~ 3.0V	XC6218P******
8	3.1V ~ 4.0V	

③ represents output voltage

MARK	OUTPUT VOLTAGE (V)			MARK	OUTPUT VOLTAGE (V)		
0	-	3.1	-	F	1.6	-	-
1	-	3.2	-	H	1.7	-	-
2	-	3.3	-	K	1.8	-	-
3	-	3.4	-	L	1.9	-	-
4	-	3.5	-	M	2.0	-	-
5	-	3.6	-	N	2.1	-	-
6	-	3.7	-	P	2.2	-	-
7	-	3.8	-	R	2.3	-	-
8	0.9	3.9	-	S	2.4	-	-
9	1.0	4.0	-	T	2.5	-	-
A	1.1	-	-	U	2.6	-	-
B	1.2	-	-	V	2.7	-	-
C	1.3	-	-	X	2.8	-	-
D	1.4	-	-	Y	2.9	-	-
E	1.5	-	-	Z	3.0	-	-

④ represents production lot number
0 to 9, A to Z repeated (G, I, J, O, Q, W, excluded)
*No character inversion used.

1. The products and product specifications contained herein are subject to change without notice to improve performance characteristics. Consult us, or our representatives before use, to confirm that the information in this datasheet is up to date.
2. We assume no responsibility for any infringement of patents, patent rights, or other rights arising from the use of any information and circuitry in this datasheet.
3. Please ensure suitable shipping controls (including fail-safe designs and aging protection) are in force for equipment employing products listed in this datasheet.
4. The products in this datasheet are not developed, designed, or approved for use with such equipment whose failure of malfunction can be reasonably expected to directly endanger the life of, or cause significant injury to, the user.
   (e.g. Atomic energy; aerospace; transport; combustion and associated safety equipment thereof.)
5. Please use the products listed in this datasheet within the specified ranges.
   Should you wish to use the products under conditions exceeding the specifications, please consult us or our representatives.
6. We assume no responsibility for damage or loss due to abnormal use.
7. All rights reserved. No part of this datasheet may be copied or reproduced without the prior permission of TOREX SEMICONDUCTOR LTD.

TOREX SEMICONDUCTOR LTD.