THIS DRAWING IS UNPUBLISHED. RELEASED FOR PUBLICATION -,- .
© COPYRIGHT - By - ALL RIGHTS RESERVED.

LOC	DIST
GP	00

REVISIONS

P	LTR	DESCRIPTION	DATE	DWN	APVD
	M	REVISED PER ECO-13-012013	09AUG2013	CJV	CWR

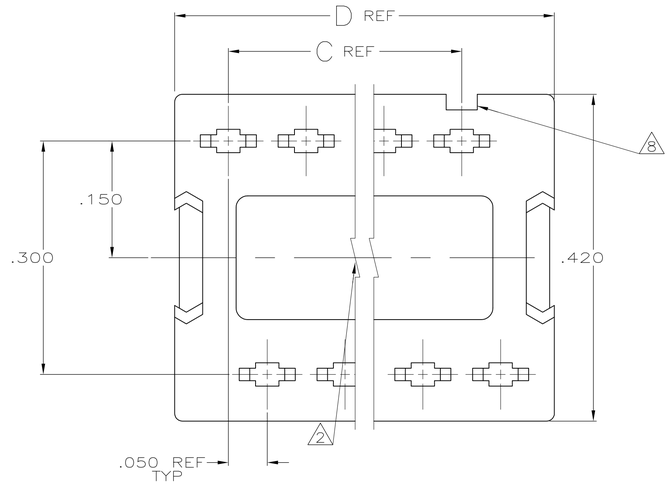

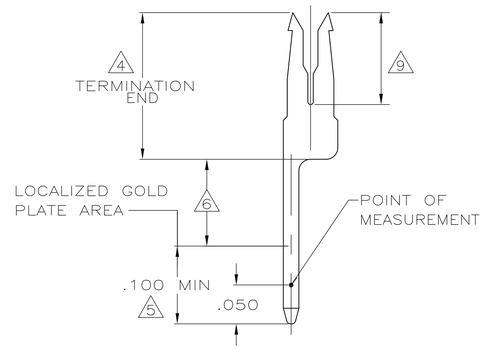

DETAIL Z

1. CONTACTS DESIGNED FOR 26 & 28 AWG STRANDED OR 26, 28 & 30 AWG SOLID WIRE.
2. AMP TRADEMARK LOCATED IN APPROX AREA SHOWN.
3. STANDOFFS: POSN 8 (2) STANDOFFS AS SHOWN.
   POSN 14-20 (3) STANDOFFS, (1) CENTERED BETWEEN (2) SHOWN
4. PLATED WITH .000100 - .000200 BRIGHT TIN LEAD OVER .000050 NICKEL.
5. PLATED WITH .000030 GOLD OVER .000050 NICKEL.
6. GOLD FLASH OVER .000050 NICKEL.
7. HEIGHT AFTER TERMINATION IS .253 REF.
8. INDICATES NO 1 POSITION.
9. PLATED WITH .000005 MIN GOLD IN IDC AREA OVER .000050 MIN NICKEL.
10. MOLDED PARTS: 94V-0 RATED THERMOPLASTIC, COLOR BLACK. CONTACTS: PHOS BRONZE.

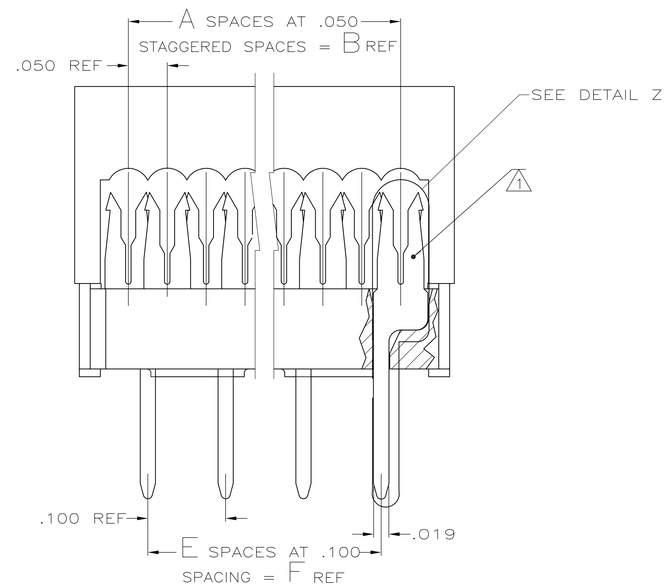

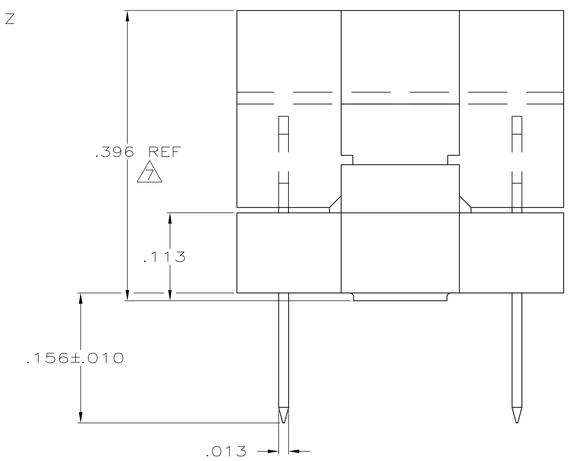

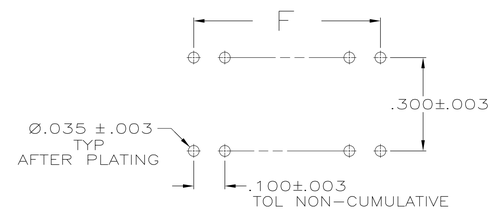

RECOMMENDED HOLE LAYOUT

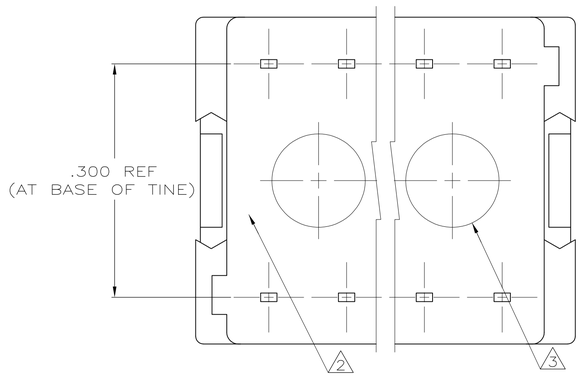

	CONTACT FINISH	F	E	D	C	B	A	NO OF POSN	PART NO
	9 5 6	.900	9	1.088	.900	.950	19	20	1-746611-0
	9 5 6	.800	8	.988	.800	.850	17	18	-9
	9 5 6	.600	6	.788	.600	.650	13	14	-8
	9 5 6	.300	3	.488	.300	.350	7	8	-7
	9 5 6	.700	7	.888	.700	.750	15	16	-6
OBSOLETE	4 5 6	.900	9	1.088	.900	.950	19	20	-5
OBSOLETE	4 5 6	.800	8	.988	.800	.850	17	18	-4
OBSOLETE	4 5 6	.700	7	.888	.700	.750	15	16	-3
OBSOLETE	4 5 6	.600	6	.788	.600	.650	13	14	-2
OBSOLETE	4 5 6	.300	3	.488	.300	.350	7	8	746611-1

THIS DRAWING IS A CONTROLLED DOCUMENT.

DIMENSIONS: INCHES

TOLERANCES UNLESS OTHERWISE SPECIFIED:
0 PLC ± -
1 PLC ± -
2 PLC ± -
3 PLC ± .005
4 PLC ± -
ANGLES ± -

MATERIAL 10

FINISH
CONTACTS: SEE TABLE

DWN 11-29-04 L. VARELA - DOCK5
CHK 11-29-04 C. ROHDE
APVD 11-29-04 M. WALMSLEY
PRODUCT SPEC 108-40013
APPLICATION SPEC 114-40005
WEIGHT -

TE Connectivity

NAME: KIT, AMP-LATCH DIP PLUG, PREASSEMBLED .100 X .300 CENTERS, 30 GOLD DUPLEX CONTACTS

SIZE	CAGE CODE	DRAWING NO	RESTRICTED TO
A1	00779	C-746611	-

CUSTOMER DRAWING | SCALE 10:1 | SHEET 1 OF 1 | REV M

4805 (3/11)