THESE DRAWINGS ARE THE PROPERTY OF QUALTEK ELECTRONICS AND NOT TO BE REPRODUCED FOR OR COMMUNICATED TO A THIRD PARTY WITHOUT THE EXPRESS WRITTEN PERMISSION OF AN OFFICER OF QUALTEK ELECTRONICS.

REVISION			
REV.	DESCRIPTION	DATE	APPROVED
B	Updated Graphics and Notes	10-13-14	LY

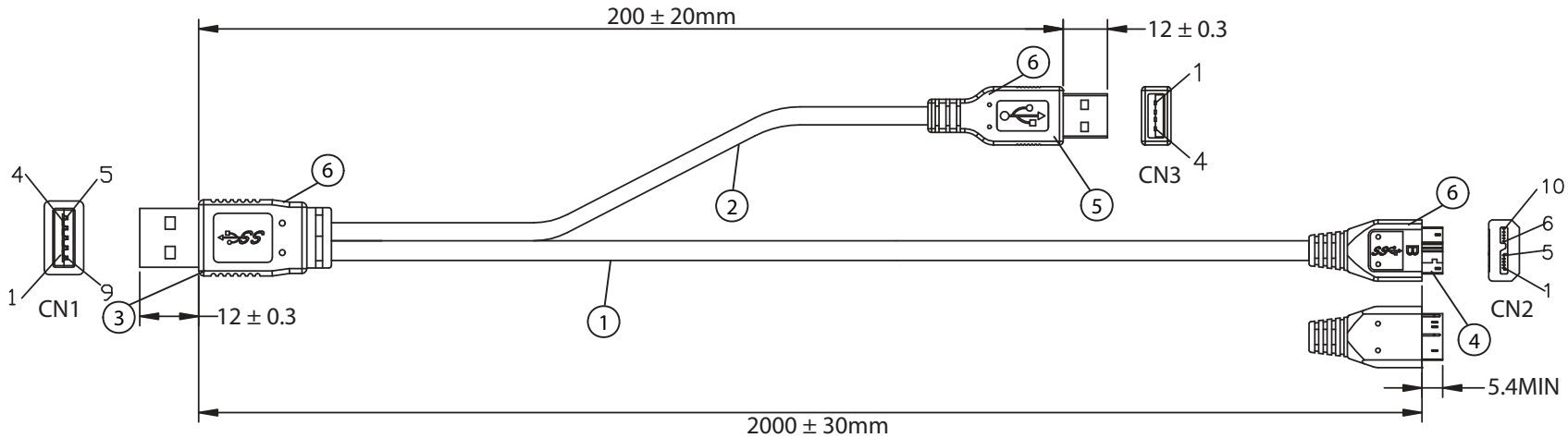

NOTES:

1. CABLE: UL20276
   (30AWG*1PR+EAM)*2+30AWG*1PR+24AWG*2C+AEB(AL) 65%
   OUTER JACKET: BLACK, OD: 5.5 ± 0.2mm
2. CABLE: UL2725
   30AWG*1PR+28AWG*2C+AEB(48B AL)
   OUTER JACKET: BLACK, OD: 3.5 ± 0.2mm
3. CONNECTOR: USB 3.0 A TYPE MALE
   INSULATOR: BLUE PBT
   PIN G/F
   NICKEL PLATED SHELL
4. CONNECTOR: MICRO USB 3.0 B TYPE MALE
   INSULATOR: BLACK
   PIN G/F
   NICKEL PLATED SHELL
5. CONNECTOR: USB 2.0 A TYPE MALE
   INSULATOR: BLACK PBT
   PIN G/F
   NICKEL PLATED SHELL
6. PVC MOLDED: V398 45P BLACK
7. PACKING: 1PC/POLYBAG
8. ELECTRICAL TEST:
   <1>.100% OPEN SHORT & MISS WIRE TEST
   <2>.INSULATION RESISTANCE: AC/DC300V 10M ohm MIN.
   <3>.CONDUCTOR RESISTANCE: 2 ohm MAX.

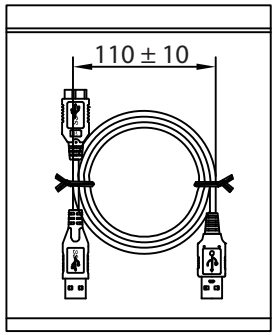

PIN OUT

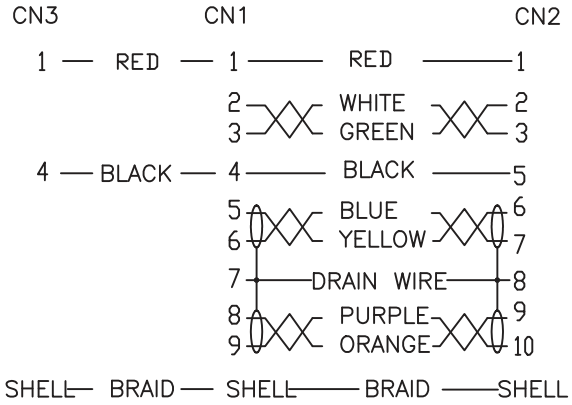

CONTROLLED

Dim range (mm)	Tolerance +/- (mm)
0-1	0.15
1-6	0.20
6-18	0.30
18-50	0.50
50-120	0.70
120-250	0.90
250-500	1.20

Qualtek Electronics Corp.
WCI DIVISION

Part Number: 3023023-02M RoHS Compliant

Description:
USB 3.0 A/M - MICRO USB 3.0 B/M + POWER CABLE

	UNIT: mm	REV. B
Drawn / Date	Checked / Date	Approved / Date
R.Nuti 06-25-10	06-25-10	LY / 06-25-10