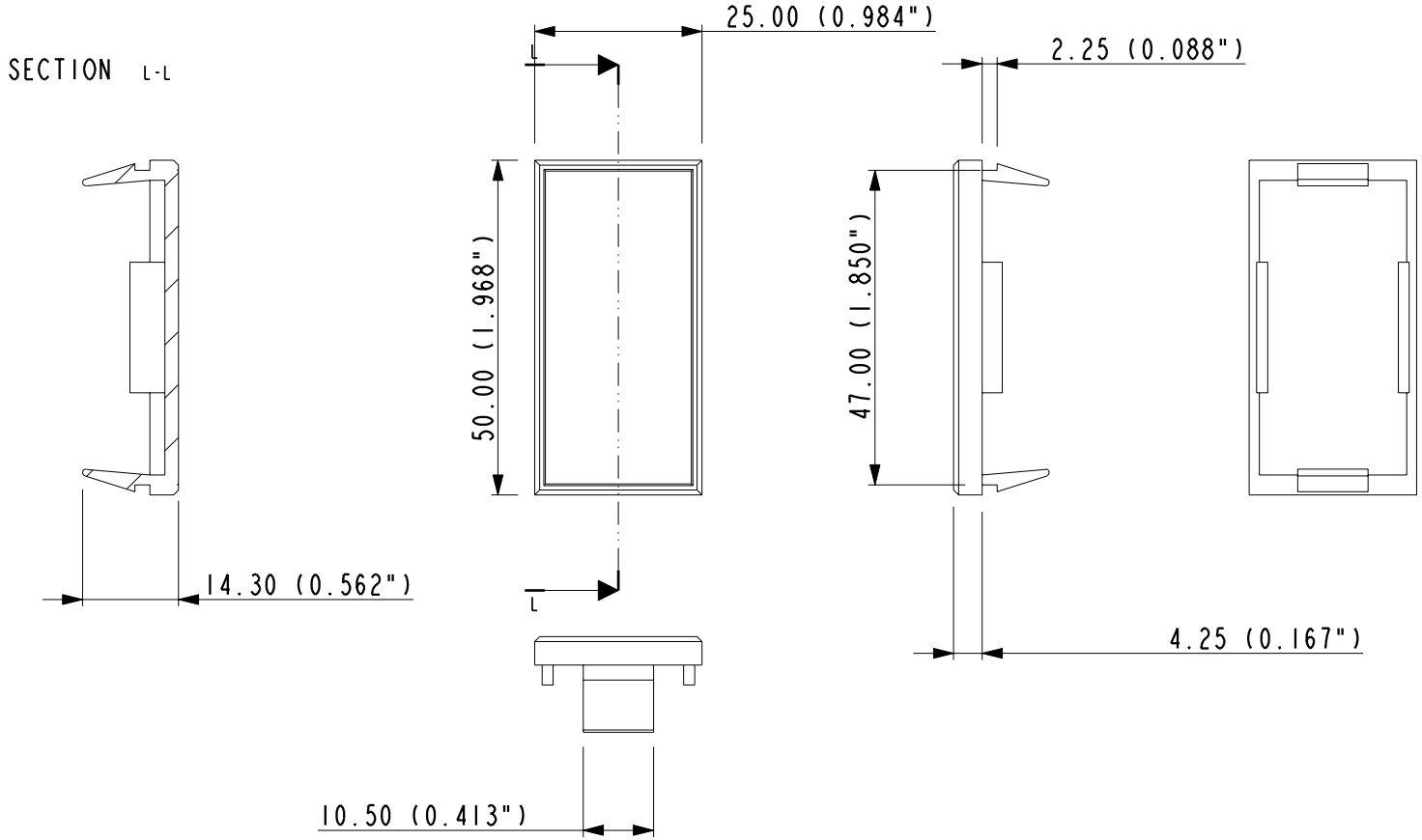

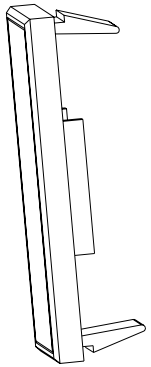

INVENTORS			
Hellermann Tyton ® A SPIRENT Company			
ALL PROPRIETARY RIGHTS IN THE SUBJECT MATTER SHOWN ON THIS DRAWING ARE EXCLUSIVE PROPERTY OF HELLERMANNTYTON			
name	date	city, state	
R W DATA	14/11/02	NORTHAMPTON U.K	

REVISION	
DRAWING level	1
by	
date	
ECN	
part level	

DIMENSIONS	
TOLERANCES	.XXXX= ±0.001
	.XXX= ±0.010
	.XX= ±0.02
	.X= ±0.1
	∠= ±0.5
	unless otherwise specified
units	mm/inches

PART			
number	FP5BLANK	phase	PRODUCTION
name	1/2 BLANK ALPHA SNAP TYPE		
material	ABS		

DRAWING			
FORMAT AH version J	CAD PRO-E	scale 1.000	
computer file number		previous number	
drawn G MAY 14/11/02	checked	approved	
type		sheet 1 of 1	
number	P155-043		