SAP PART NO	WOODHEAD PN:
1210130110	B482000N0

Item No.	Description	Q.Ty. Pieces	SAP PN:
1	SCREW INSERT	1	1211190158
2	BASE HOUSING	1	1211220167
3	LIVE TERMINALS	2	1211200122
4	EARTH TERMINAL	1	1211200126

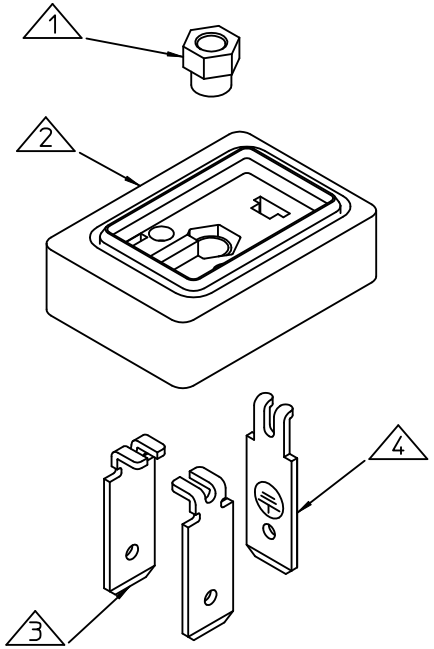

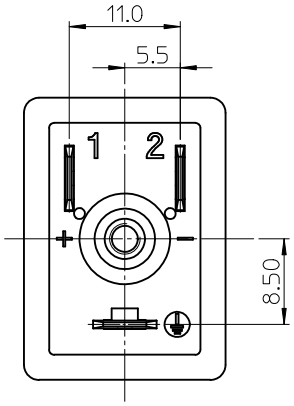

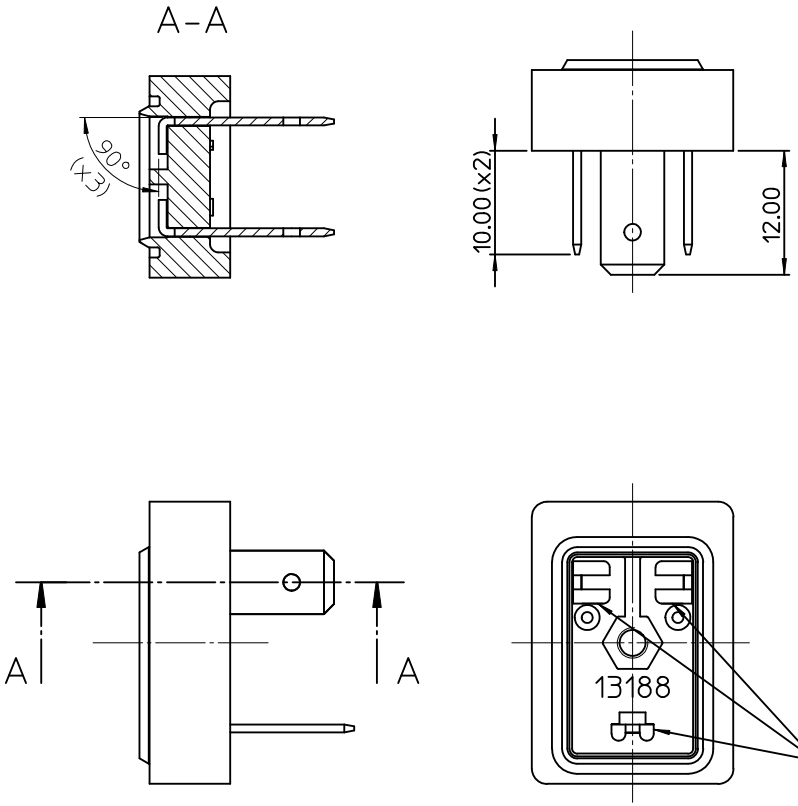

NOTES:

1. TERMINAL TO BE BENT AFTER INSERTION

CHANGE TERMINALS HEIGHT		
EC NO: IPG2012-0638	DRWN: JMARSZALEK 2012/03/29	CH'KD: APPR: GRIZZO 2012/04/11
B		DESCRIPTION
REV		

QUALITY SYMBOLS: ▼=0 ; (C)=0

GENERAL TOLERANCES (UNLESS SPECIFIED)	mm	INCH
4 PLACES	± ---	± ---
3 PLACES	± ---	± ---
2 PLACES	± 0.10	± ---
1 PLACE	± 0.2	± ---
ANGULAR ±---°		

DRAFT WHERE APPLICABLE MUST REMAIN WITHIN DIMENSIONS

DIMENSION STYLE: MM ONLY

SCALE: -

DESIGN UNITS: METRIC

FIRST ANGLE PROJECTION

DRAWN BY: JMARSZALEK DATE: 2012/02/28

CHECKED BY: DATE:

APPROVED BY: DATE:

TITLE: DIN 11MM BASE

molex MOLEX INCORPORATED

MATERIAL NO.: 1210130110

DOCUMENT NO.: SD-121013-001

SHEET NO.: 1 OF 1

SIZE: A3

THIS DRAWING CONTAINS INFORMATION THAT IS PROPRIETARY TO MOLEX INCORPORATED AND SHOULD NOT BE USED WITHOUT WRITTEN PERMISSION