THIS COPY IS PROVIDED ON A RESTRICTED BASIS AND IS NOT TO BE USED IN ANY WAY DETRIMENTAL TO THE INTERESTS OF PANDUIT CORP.

Material	High Conductivity Seamless Copper Tube
Plating	Electro-Tin
Wire Size	6 STR/FLEX
Wire Type	Stranded Copper: Class B & C Compact, Class G, H, I, K, M, Locomotive
Wire Strip Length	1-1/8 in.
Stud Size	3/8 in.
UL Listed Wire Connector	Yes, for applications up to 35kv. Consult cable manufacturer for voltage stress relief instructions with applications greater than 2000 volts.
UL Temperature Rating	90° C
C.S.A Certified Wire Connector	Yes
Panduit Color Code on Barrel	BLUE
Panduit Die Index No. on Barrel	P24
Alternate Industry Die Index No. ( ) on Barrel	(7)

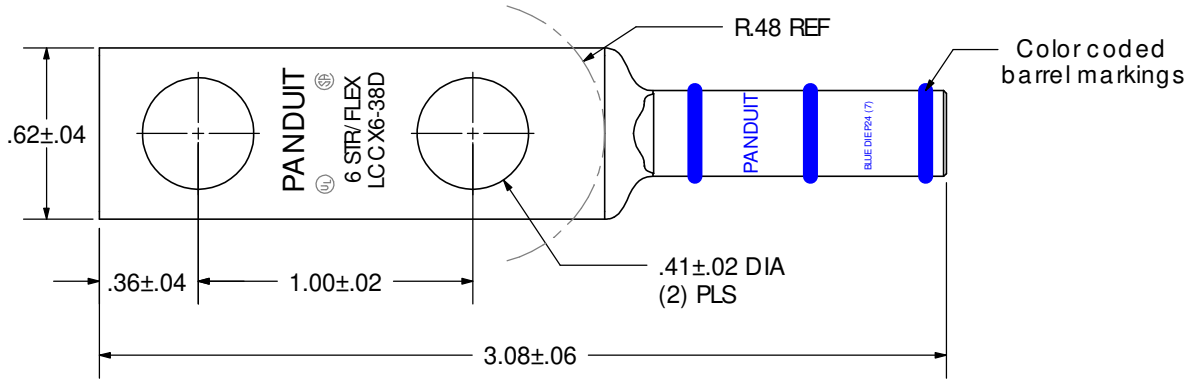

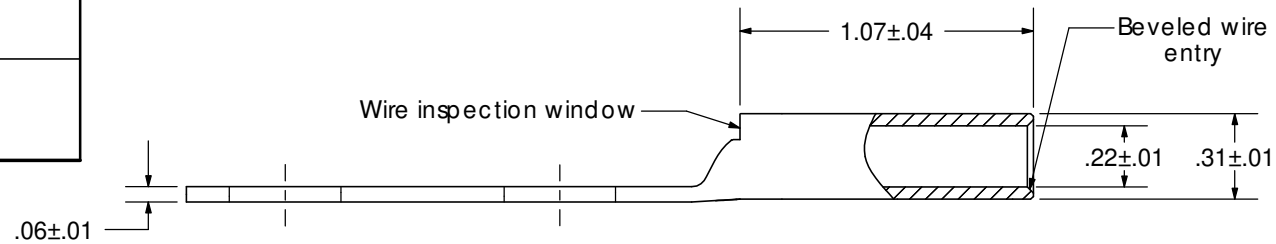

CERTIFIED

LISTED
Wire Connector

REV	DATE	BY	CHK	DESCRIPTION	ECN
00	6/03	SAC	SAC	RELEASED	10850

PANDUIT CORP. TINLEY PARK, ILLINOIS

LCCX6-38D-L
Copper Lug - Two-Hole, Long Flex Barrel with Window

SCALE N/A

DRAWING NO / CAD FILE LCCX6-38D-CUST