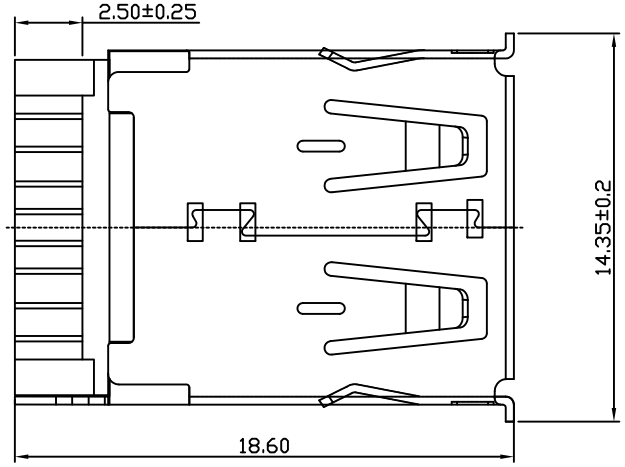

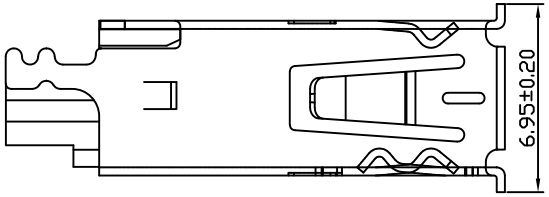

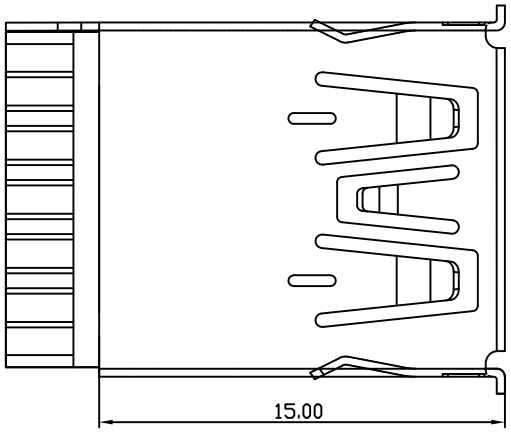

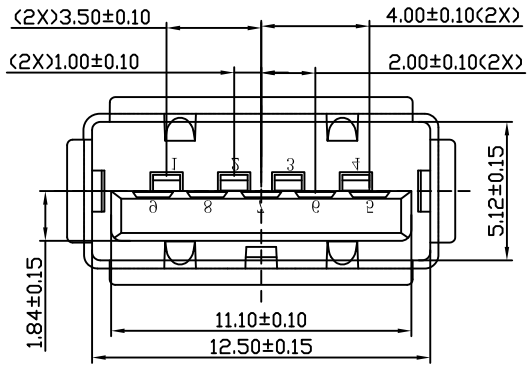

NOTE:
1.MATERIAL:
1.1 INSULATOR:PBT UL 94V-0
1.2 CONTACT:4P C2680/5P C5191(T=0.20mm)
1.3 SHELL:C2680(T=0.30mm)
2.ELECTRICAL CHARACTERISTICS:
2.1 Current Rating:1.8AMP at 250V AC
Voltage Rating:30V
2.2 Insulation Resistance:100MΩ Min
2.3 Contact Resistance:30mΩ Max
2.4 Dielectric Withstanding Voltage:100V AC
2.5 OPERATING TEMPEROTURE:-40°C ~ 85°C
3 MECHANICAL CHARACTERISTICS:
3.1 MATING FORCE:35 N Max
3.2 UNMATED FORCE:10 N Min INITIAL; 8 N Min AFTER TEST
3.3 DURABILITY:1,500 CYCLES
4.PLATING:
4.1 TERMINAL.
50U" MIN NICKEL ALL OVER
100U" MIN TIN ON SOLDER AREA
1~30U" AU ON CONTACT AREA
4.2 SHELL:100U" MIN NICKEL ALL OVER

Pin #	SIGNAL NAME	DESCRIPTION	MATING SEQUENCE
1	VBUS	POWER	SECOND
2	D-	USB 2.0 DIFFERENTIAL PAIR	THIRD
3	D+		
4	GND	GROUND FOR POWER RETURN	SECOND
5	StdA_SSRX-	SUPERSPEED RECEIVER DIFFERENTIAL PAIR	LAST
6	StdA_SSRX+		
7	GND_DRAIN	GROUND FOR SIGNAL RETURN	
8	StdA_SSTX-	SUPERSPEED TRANSMITTER DIFFERENTIAL PAIR	
9	StdA_SSTX+		
Shell	Shield	CONNECTOR METAL SHELL	FRIST

ITEM	DESCRIPTION	MATERIAL	REMARKS
4	HOUSING	PBT	UL94V-0
3	SHELL	SPCC or Brass T=0.3mm	OVEP-PIATING: Ni Or Au
2	5P TERMINAL	Brass T=0.2mm	OVEP-PIATING: Au Ni/Sn
1	4P TERMINAL	Phosphor Bronze T=0.2mm	OVEP-PIATING: Au Ni/Sn

-TOLERANCES-
UNLESS OTHERWISE SPECIFIED

X.X ±0.25	X.X° ±3.00°	APPD:	
X.XX ±0.20	X.XX° ±1.00°	CHECK:	
X.XXX ±0.15	X.XXX° ±0.500°	DRAW:	

CnC Tech, LLC

TITLE: USB 3.0 AF 180度焊线式

PRODUCT NO: 1003-006-01200

DATE	SCALE	UNIT	TYPE	PAGE
2012/04/06	1:1	mm	Z	1 / 1