Alle Rechte vorbehalten/ *All rights reserved*

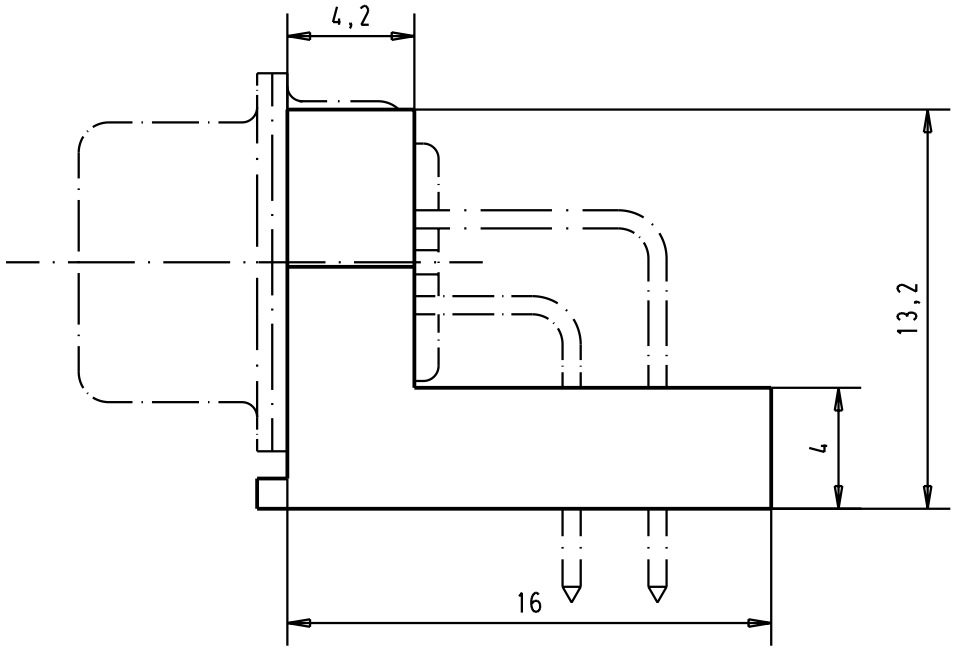

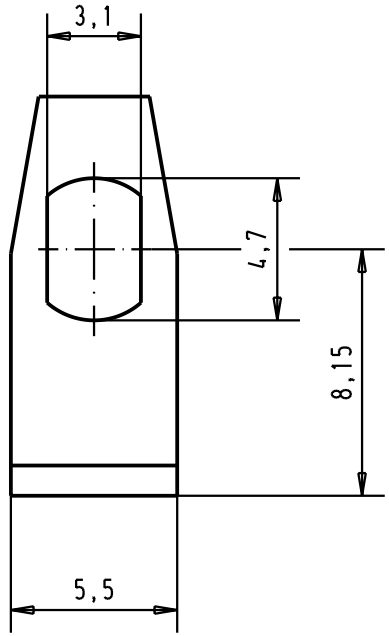

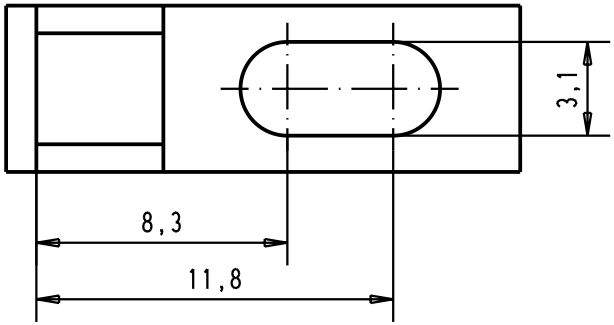

							Dat.	Name		D-Sub, Fixing plastic bracket for 9-15-25-37 and 50 poles	Maßstab/ *Scale*
						Detail.	09-APR-02	CV	All Dim. in mm Orig. Size DIN A 4		4:1
						Insp.					
						Stand.					
09 67 000 9913									HARTING EURL F-95972 Paris	TB 09670009913	Blatt/ *Page*
			29768	09-APR-02	CV					Sub.	1
Part number			Mod.	Dat.	Name						