DRAWING MADE IN THIRD ANGLE PROJECTION

680471 ⇔ 680471

/nd/mbaum/tomjob3

PART NUMBER	REV	FIRST USED
680471 -1	B	122500-1
680471 -2	B	565435-5
680471 -3	B	354500-1

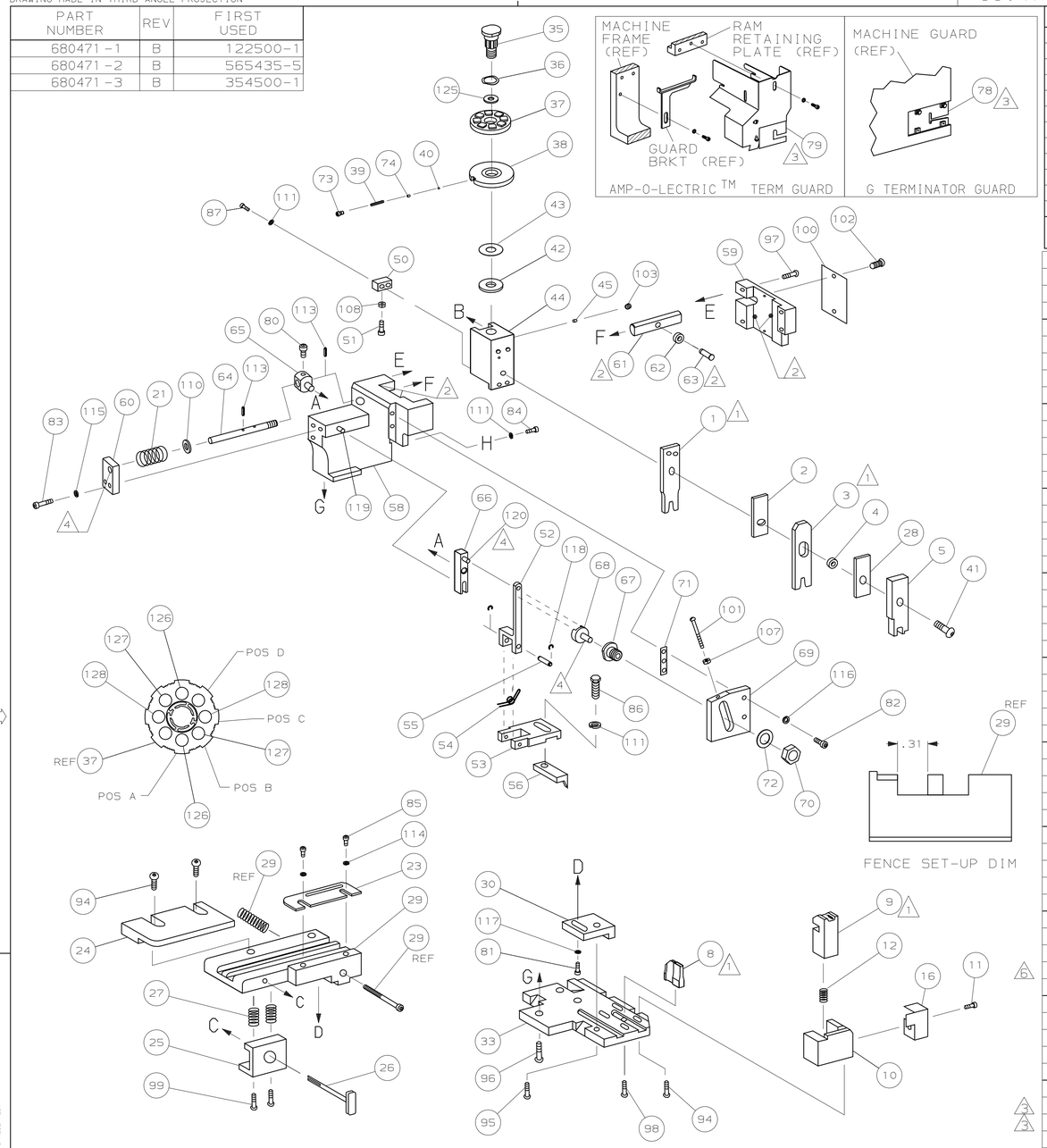

TERMINAL NAME: SOCKET

286584

CRIMPING DATA

PAD LTR	CRIMP HEIGHT	WIRE SIZE
A	.054 ±.002 [1.37 ±0.05mm]	2700 △7
B	.044 ±.002 [1.12 ±0.05mm]	1350 △8
C	NOT	USED
D	NOT	USED

AMP P/N	MFG P/N
286584	25-51-11-23-178

CRIMP	SIZE	TYPE	RANGE
WIRE	.090 [2.29mm]	F	1350-2700 CMA
INSUL	.130 [3.30mm]	F	.060-.150

WIRE STRIP LENGTH	TERM APPL SPEC	FEED	APPL INSTRUCTION	SET UP GAGE	LAYOUT
.156-.188	NONE	.470	408-8040	458637-1	L1936

-3	-2	-1	U/M	DWG SIZE	PART NO	DESCRIPTION	ITEM NO
							129
							128
2	2	2	-	C	3-354779-2	PIN, WIRE DISC (.3150)B	127
2	2	2	-	C	1-354779-0	PIN, WIRE DISC (.3040)A	126
1	1	1	-	A	986950-1	WASHER, FLAT PRECISION	125
1	1	1	-	A	217238-1	GENERAL INSTRUCTION PACKAGE	124
1	1	1	-	-	4088040	SF APPL INST 408-8040	123
							122
							121
REF	REF	REF	-	A	1-21030-1	PIN,DOWEL(ø.187x.50)LEVER	120
REF	REF	REF	-	A	1-21030-6	PIN,DOWEL(ø.187x1.25)HOUSING	119
REF	REF	REF	-	A	21045-3	RING,RET "C"(ø.187)FD FING PIN	118
1	1	1	-	A	21024-5	WASHER, LOCK(#10)ADJ BLOCK	117
REF	REF	REF	-	A	21024-5	WASHER,LOCK(#10)ADJ PLATE	116
REF	REF	REF	-	A	21024-5	WASHER,LOCK(#10)FEED GDE ROD	115
2	2	2	-	A	21024-2	WASHER,LOCK(#4)FRONT STP GUIDE	114
REF	REF	REF	-	A	5-21028-1	PIN,SLT SPR(ø.125x.50)ADJ ROD	113
							112
4	4	4	-	A	21024-4	WASHER,LOCK(#8)STRIPPER	111
REF	REF	REF	-	A	21899-4	WASHER,FLAT(ø5/16)SCREW ADJ	110
							109
1	1	1	-	A	21018-5	NUT,HEX(NO.6)HOLDDOWN	108
REF	REF	REF	-	A	21018-5	NUT,HEX(6-32)FEED ADJ	107
							106
							105
							104
1	1	1	-	A	21009-2	SCR,SKT SET(1/4-20x.25 LW)RAM	103
2	2	2	-	A	21017-2	SCR,DRIVE(#2x.19)ID PLATE	102
REF	REF	REF	-	A	6-23715-5	SCR,PAN HD(6-32x1.50)FEED ADJ	101
1	1	1	-	B	461264-1	PLATE, IDENTIFICATION	100
2	2	2	-	A	5-21006-6	SCR, SET(10-32x.75)DRAG	99
1	1	1	-	A	22733-8	SCR,BHC(8-32x.38 LW)ANVIL	98
REF	REF	REF	-	A	2-21002-9	SCR,BHC(10-32x.75)CAP	97
REF	REF	REF	-	A	2-22733-8	SCR,BHC(1/4-20x.62)HOUSING	96
REF	REF	REF	-	A	2-21002-7	SCR,BHC(10-32x.50)SG ADJ BLOCK	95
4	4	4	-	A	2-21002-2	SCR,BHC(8-32x.50)TERM H DWN	94
							93
							92
1	1	1	-	A	1-21002-7	SCR,BHC(6-32x.38)CAM	91
							90
							89
							88
2	2	2	-	A	2-21000-7	SCR,SHC(8-32x.48)DEP-HOLD	87
1	1	1	-	A	2-22603-0	SCR,HEX HD(8-32x.31)FEED FINGER	86
2	2	2	-	A	1-21000-3	SCR,SHC(4-40x.25)F ST GUIDE	85
1	1	1	-	A	2-21000-7	SCR,SHC(8-32x.50)STRIPPER	84
REF	REF	REF	-	A	3-21000-7	SCR,SHC(10-32x.75)FEED ROD GD	83
REF	REF	REF	-	A	3-21000-6	SCR,SHC(10-32x.62)FD ADJ BLK	82
1	1	1	-	A	3-21000-4	SCR,SHC(10-32x.38)SG ADJ BL	81
REF	REF	REF	-	A	3-21000-4	SCR,SHC(10-32x.38)PIVOT BLK	80
-	REF	-	-	B	455749-1	GUARD, WINDOW	79
REF	-	-	-	B	679532-1	INSERT, GUARD	78
							77
							76
							75
1	1	1	-	A	690603-1	SPRING, ASSIST	74
1	1	1	-	A	23030-1	SCR,SHC(6-32x.25 SL)INS DISC	73
REF	REF	REF	-	A	458109-1	WASHER, SPECIAL	72
REF	REF	REF	-	A	690517-1	SPACER	71
-3	-2	-1	U/M	DWG SIZE	PART NO	DESCRIPTION	ITEM NO

QTY REQD PER ASSY — PARTS LIST

-1	LEADMAKER	MECH POST FEED
-2	BENCH MODEL K	MECH PRE FEED
-3	BENCH MODEL G	MECH PRE FEED

-3	-2	-1	U/M	DWG SIZE	PART NO	DESCRIPTION	ITEM NO
REF	REF	REF	-	B	22594-8	NUT,HEX(1/2-20)	70
REF	REF	REF	-	B	240628-1	PLATE, ADJUSTMENT	69
REF	REF	REF	-	B	240626-1	SHAFT, PIVOT	68
REF	REF	REF	-	B	240633-1	BUSHING	67
REF	REF	REF	-	A	455680-1	LEVER, INTERMEDIATE	66
REF	REF	REF	-	B	240629-1	BLOCK, PIVOT	65
REF	REF	REF	-	A	240632-2	SCREW, ADJ FEED ROD	64
REF	REF	REF	-	B	240659-3	PIN, CAM ROLLER	63
REF	REF	REF	-	B	240658-1	ROLLER, CAM	62
REF	REF	REF	-	B	454398-2	ROD, FEED	61
REF	REF	REF	-	A	454178-1	GUIDE, FEED ROD	60
REF	REF	REF	-	C	454220-1	CAP, RAM	59
REF	REF	REF	-	D	454485-1	HOUSING	58
							57
1	1	1	-	B	458537-2	PAWL, FEED	56
REF	REF	REF	-	B	240624-1	PIN, FEED FINGER	55
REF	REF	REF	-	B	691499-1	SPRING, FEED FINGER	54
REF	REF	REF	-	B	690541-1	HOLDER, FEED FINGER	53
REF	REF	REF	-	A	455679-1	LEVER, TERMINAL FEED ARM	52
1	1	1	-	A	811242-2	BUMPER, HOLDDOWN	51
1	1	1	-	A	690753-1	SPACER, TONKER	50
1	-	-	-	B	690602-6	CAM, PRE-FEED 1 5/8 ST	49
-	1	-	-	B	690602-5	CAM, PRE-FEED 1 1/8 ST	48
-	-	1	-	B	690501-4	CAM, POST-FEED 1 5/8 ST	47
1	1	1	-	B	459456-1	APPLICATOR, BASIC (SUBASSY)	46
1	1	1	-	A	690191-1	PLUG, NYLON	45
1	1	1	-	C	455673-1	RAM	44
1	1	1	-	A	690125-1	WASHER, LAMINATED	43
1	1	1	-	A	690124-1	WASHER, RAM	42
1	1	1	-	A	7-21002-9	BOLT, CRIMPER(5/16x1.00)	41
1	1	1	-	A	23241-6	BALL, STEEL	40
1	1	1	-	A	690170-1	SPRING, COMPRESSION	39
1	1	1	-	C	690142-1	DISC, INSULATION	38
1	1	1	-	D	354777-1	WIRE DISC, PLASTIC	37
1	1	1	-	A	22480-5	WASHER, SPRING	36
1	1	1	-	B	690212-1	POST, RAM	35
							34
REF	REF	REF	-	D	455675-1	PLATE, BASE	33
							32
							31
REF	REF	REF	-	B	455689-1	BLOCK, STRIP GUIDE ADJ	30
1	1	1	-	C	318042-1	STRIP GUIDE PLATE ASSY	29
1	1	1	-	C	1-455888-9	SPACER, FRONT SHEAR DEP	28
2	2	2	-	A	1-22284-0	SPRING, DRAG	27
1	1	1	-	B	690546-1	LEVER, DRAG RELEASE	26
1	1	1	-	B	240792-1	DRAG, TERMINAL	25
1	1	1	-	D	5-690504-9	GUIDE, STRIP (REAR)	24
1	1	1	-	A	690438-1	GUIDE, STRIP (FRONT)	23
-	-	1	-	B	690472-2	STRIPPER	22
REF	REF	REF	-	A	4-22284-9	SPRING, FEED RETURN	21
							20
1	1	-	-	B	691353-1	STRIPPER	19
							18
							17
1	1	1	-	B	318563-1	GUARD, CHIP, FRONT	16
							15
							14
							13
1	1	1	-	A	3-22280-3	SPRING, SHEAR	12
1	1	1	-	B	690461-1	STOP, SHEAR	11
1	1	1	-	C	690459-1	HOLDER, SHEAR (FRONT)	10
1	1	1	-	C	454276-1	SHEAR, FLOAT (FRONT)	9
1	1	1	-	C	1-662187-2	ANVIL	8
							7
							6
1	1	1	-	C	1-455889-4	DEPRESSOR, SHEAR (FRONT)	5
1	1	1	-	B	238011-7	SPACER, BLOCK CRIMPER	4
1	1	1	-	C	4-683453-2	CRIMPER, INSULATION	3
1	1	1	-	C	455888-4	SPACER, CRIMPER	2
1	1	1	-	C	4-456406-7	CRIMPER, WIRE	1
-3	-2	-1	U/M	DWG SIZE	PART NO	DESCRIPTION	ITEM NO

QTY REQD PER ASSY — REVISION OF EACH ASSY NO (WHEN BLANK, USE DWG REVISION) — PARTS LIST

△1 RECOMMENDED SPARE PARTS.

△2 GREASE LIGHTLY.

△3 GUARD MUST BE IN PLACE WHEN OPERATING APPLICATOR IN A BENCH MACHINE.

△4 LUBRICATE DAILY USING NO. 20 MACHINE OIL.

5. ITEMS WITH QTY OF REF SPECIFIED (EXCEPT ITEMS 78 AND 79) ARE USED ON ITEM 46.

△6 CUT TO LENGTH AT ASSY

△7 USE (2).75mm² FOR SET-UP ONLY.

△8 USE .75 mm² FOR SET-UP ONLY

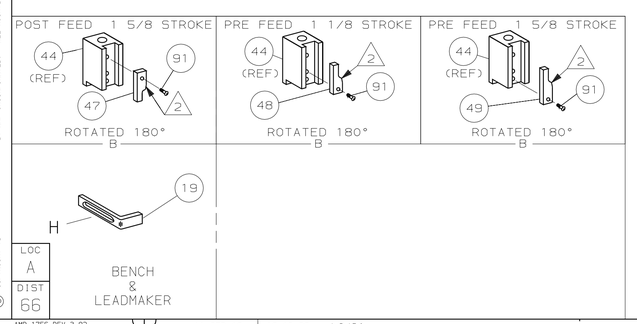

LOC	DIST
A	66

P	F	LTR	REVISION RECORD	APP	DATE
		B	ECR-06-021345	TM	9-06
		A1	ECN 0150-0459-04	TE	4-04
		A	REVISED	CE	7/97

DIMENSIONS IN INCHES. DO NOT SCALE PRINT. TOLERANCES UNLESS OTHERWISE SPECIFIED: 2 PLC DEC ±.02 3 PLC DEC ±- 4 PLC DEC ±- ANGLES ± - SURF TEXTURE: √ REMOVE BURRS, BREAK SHARP EDGES R.015 MAX

MATL – HT TR – FIN –

DR B.HIGMAN 21MAY97 APP T.ELBIN 21MAY97

CHK C.ERISMAN 21MAY97 REL – –

AMP Incorporated Harrisburg, PA 17105-3608

NAME SIDE FEED HDM APPLICATOR

MACHINE REF MINI APPL

SCALE – D DWG NO 680471 SHEET 1 OF 1 REV B

CAGE CODE 00779 CUSTOMER AND ASSEMBLY DRAWING

RESTRICTED TO

THIS DRAWING IS A CONTROLLED DOCUMENT.

THIS DRAWING IS UNPUBLISHED. © COPYRIGHT 19 BY AMP INCORPORATED. ALL RIGHTS RESERVED. RELEASED FOR PUBLICATION .19