USED ON —

PART NUMBER	REV	FIRST USED	TERMINATOR	FEED TYPE	DESCRIPTION
1528520 −1	C	–	LEADMAKER	MECH POST FEED	CUTS CARRIER
1528520 −2	C	–	BENCH	MECH PRE FEED	CUTS CARRIER
1528520 −6	C	–	LEADMAKER	MECH POST FEED	CONTINUOUS CARRIER
7−1528520 −1	C	–	LEADMAKER	MECH POST FEED	−1 AND SPARE PARTS
7−1528520 −2	C	–	BENCH	MECH PRE FEED	−2 AND SPARE PARTS
7−1528520 −6	C	–	LEADMAKER	MECH POST FEED	−6 AND SPARE PARTS
7−1528520 −7	A	–	–	–	SPARE PARTS KIT

DWG NO 1528520

DIMENSIONING AND TOLERANCING PER ASME Y14.5M (ISO STANDARDS) THIS DRAWING IS A CONTROLLED DOCUMENT.

CRIMP DATA FCI TERMINAL FCI CRIMP SPECS (4)

TERMINAL NAME: 2.8MM APEX TERMINAL FEMALE

CRIMP	SIZE	TYPE	RANGE
WIRE	2.36 [.093 IN]	F	1.50mm² − 2.50mm²
INSUL	3.05 [.120 IN]	0	2.41−2.77 [.095−.109 IN]

WIRE STRIP LENGTH 4.80−5.60 [.189−.220 IN]

APPL INSTRUCTION 408−8322 & 408−8490

TERMINAL APPL SPEC FCI TEST DOC. NONE –

FEED 15.20 [.598 IN]

TERMINALS APPLIED

AMP TERM PN	MFR TERM PN	–	–	–
1572825−1	5400 1400	–	–	–
–	–	–	–	–
–	–	–	–	–
–	–	–	–	–
–	–	–	–	–
–	–	–	–	–
–	–	–	–	–

WIRE SIZE mm² AWG	CRIMP HEIGHT *	REF SETTING
2.50mm²	1.90 ±0.05 [.075 ±.002 IN]	A 6
1.50mm²	1.50 ±0.05 [.059 ±.002 IN]	D 4
–	–	–
–	–	–
–	–	–
–	–	–
–	–	–
–	–	–
–	–	–
–	–	–
–	–	–
–	–	–
–	–	–
–	–	–
–	–	–

SET UP GAGE	LAYOUT
458637−3	L1528519

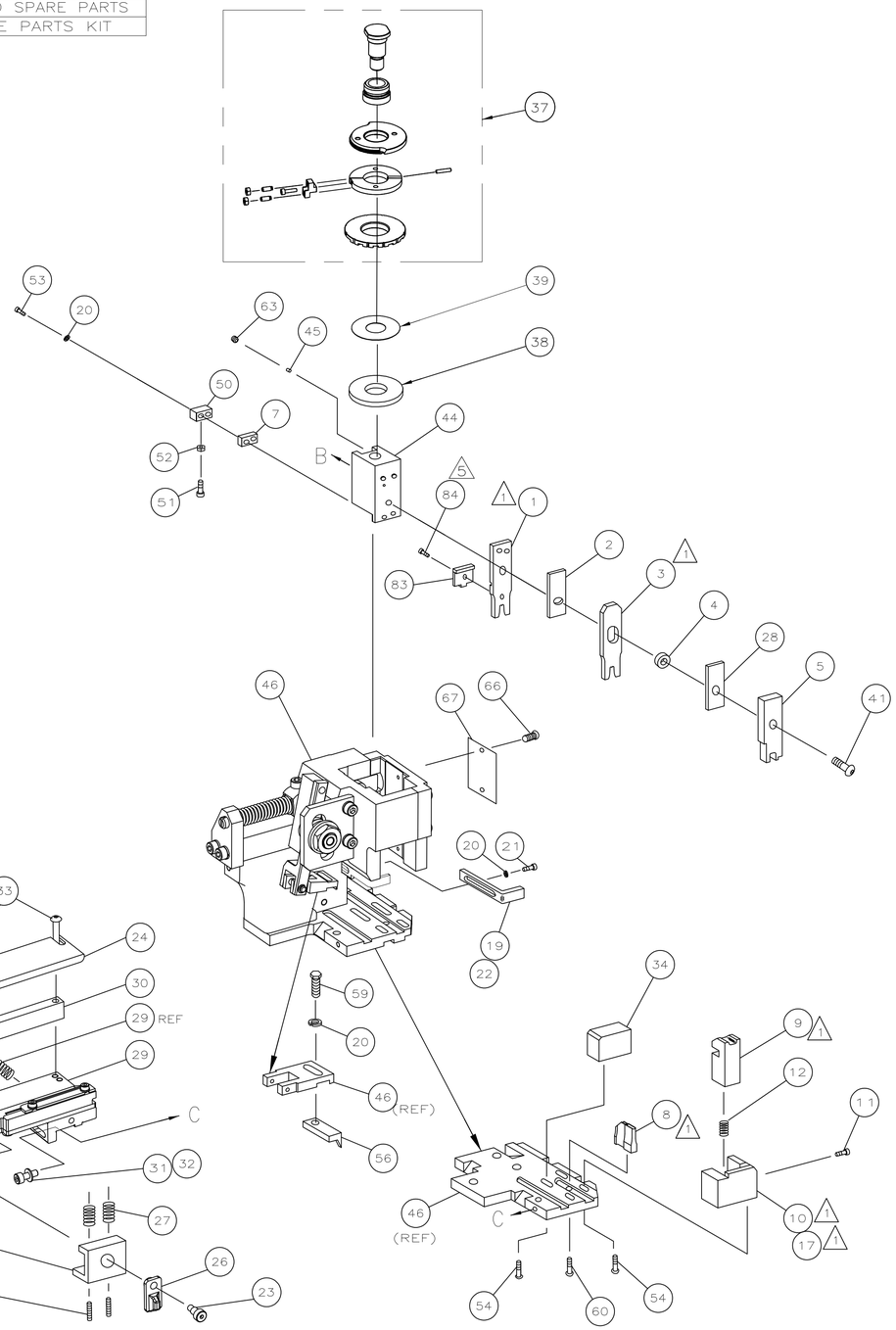

(1) RECOMMENDED SPARE PARTS.
2. GREASE RAM, CAM, CAM FOLLOWER AND FEED ROD LIGHTLY.
3. LUBRICATE DAILY PER THE APPLICATOR INSTRUCTION SHEET SUPPLIED WITH THE APPLICATOR.
(4) ALL CRIMP DATA SUPPLIED BY TERMINAL MANUFACTURER.
(5) CUT TO LENGTH ON ASSEMBLY AS REQUIRED.

VIEW B ROTATED 180°

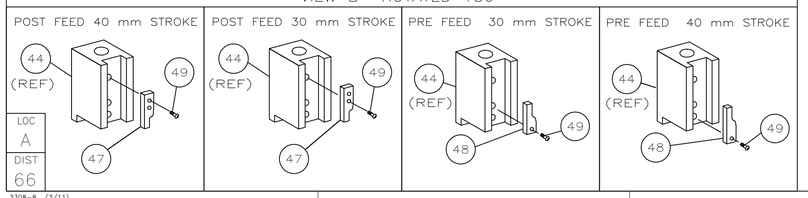

* WARNING:

ON INSTALLATION, SET WIRE DISC TO LARGEST WIRE SIZE SETTING. USE OF SETTINGS BELOW MIN REQUIRED CRIMP HEIGHT SETTING WILL CAUSE DAMAGE TO CRIMP TOOLING.

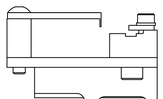

(5)	–	1	1	1	1	1	1	985575−1	SCR,FHC (M3X6) DEPRESSOR	84
	–	1	1	1	1	1	1	224405−4	DEPRESSOR, WIRE, SPECIAL	83
	–	1	1	1	1	1	1	1528520	PRINT, APPLICATOR LOG SHEET	72
	–	1	1	1	1	1	1	1338705−3	DOCUMENTATION PACKAGE	71
										69
										68
	–	1	1	1	1	1	1	461264−5	PLATE, IDENTIFICATION	67
	–	2	2	2	2	2	2	21017−2	SCR,DRIVE(#2x.19)ID PLATE	66
										65
										64
	–	1	1	1	1	1	1	3−18031−0	SCR,SKT SET(M6X6)RAM	63
										62
	–	2	2	2	2	2	2	2−18032−5	SCR,SKT SET (M5X20)DRAG	61
	–	1	1	1	1	1	1	18024−7	SCR,BHC(M4X10)ANVIL	60
	–	1	1	1	1	1	1	5−18022−2	SCR,HEX(M4X8)FEED FINGER	59
										58
										57
	–	1	1	1	1	1	1	1338685−1	PAWL, FEED	56
										55
	–	4	4	4	4	4	4	18024−8	SCR,BHC(M4x12)SHEAR HOLDER	54
	–	2	2	2	2	2	2	9−18023−6	SCR,SHC(M4x14)TERM HLD DWN	53
	–	1	1	1	1	1	1	18030−1	NUT,HEX(M3)HOLD DOWN	52
	–	1	1	1	1	1	1	811242−5	BUMPER, HOLDDOWN	51
	–	1	1	1	1	1	1	690753−2	SPACER, TONKER	50
	–	1	1	1	1	1	1	18024−3	SCR,BHC(M3X10)CAM	49
	–	–	1	–	–	1	–	1338675−1	CAM, PRE FEED 30 & 40 mm ST	48
	–	1	–	1	1	–	1	1338676−1	CAM, POST FEED 30 & 40 mm ST	47
	–	1	1	1	1	1	1	1320999−3	APPLICATOR BASIC SUBASSY	46
	–	1	1	1	1	1	1	690191−1	PLUG, NYLON	45
	–	1	1	1	1	1	1	1338660−1	RAM	44
										43
										42
	–	1	1	1	1	1	1	2−18024−6	SCR,BHC(M8X25)RAM	41
										40
	–	1	1	1	1	1	1	690125−1	SHIM SUBASSY	39
	–	1	1	1	1	1	1	469367−2	SPACER, FINE ADJUST	38
	–	1	1	1	1	1	1	879103−2	FINE ADJUST HEAD SUBASSY	37
										36
										35
	–	1	1	1	1	1	1	1320934−6	SUPPORT, TERMINAL	34
	–	2	2	2	2	2	2	1−18024−0	SCR,BHC(M4X20)STRIP GUIDE	33
	–	1	1	1	1	1	1	18027−2	WASHER, FLAT(M4)	32
	–	1	1	1	1	1	1	1−18023−2	SCR,SKT CAP(M4X12)MOUNT BLOCK	31
	–	1	1	1	1	1	1	1320908−2	SPACER, STRIP GUIDE	30
	–	1	1	1	1	1	1	1633073−4	STRIP GUIDE PLATE ASSY	29
	–	1	1	1	1	1	1	455888−4	SPACER, FRONT SHEAR DEP	28
	–	2	2	2	2	2	2	1−22284−0	SPRING, DRAG	27
	–	1	1	1	1	1	1	356835−1	LEVER, DRAG RELEASE	26
	–	1	1	1	1	1	1	240792−1	DRAG, TERMINAL	25
	–	1	1	1	1	1	1	1320928−1	PLATE, STRIP GUIDE	24
	–	1	1	1	1	1	1	980371−4	SCR,SHC SHLD	23
	–	1	–	1	1	–	1	1−690472−4	STRIPPER	22
	–	1	1	1	1	1	1	1−18023−1	SCR,SHC(M4X10)STRIPPER	21
	–	4	4	4	4	4	4	18025−2	WASHER,LOCK(M4)STRIPPER	20
	–	–	1	–	–	1	–	1−690472−9	STRIPPER	19
										18
(1)	–	1	–	–	1	–	–	1338684−1	HOLDER, SHEAR, FRONT (NO−CUT)	17
										16
										15
										14
										13
	–	1	1	1	1	1	1	3−22280−3	SPRING, SHEAR	12
	–	1	1	1	1	1	1	356885−4	STOP, SHEAR	11
	–	–	1	1	–	1	1	1320921−1	HOLDER, SHEAR, FRONT (CUT)	10
(3)	–	1	1	1	1	1	1	462006−1	SHEAR, FLOAT (FRONT)	9
	1	2	2	2	1	1	1	7−1333225−1	ANVIL	8
	–	1	1	1	1	1	1	3−240641−4	SPACER, DEPRESSOR (REAR)	7
										6
	–	1	1	1	1	1	1	2−455889−4	DEPRESSOR, SHEAR (FRONT)	5
	–	1	1	1	1	1	1	238011−4	SPACER, BLOCK CRIMPER	4
(1)	1	2	2	2	1	1	1	3−1583690−3	CRIMPER, INSULATION	3
	–	1	1	1	1	1	1	1−455888−0	SPACER, CRIMPER	2
(1)	1	2	2	2	1	1	1	1−856313−9	CRIMPER, WIRE	1
	−77	−76	−72	−71	−6	−2	−1	PART NO	DESCRIPTION	ITEM NO

QTY REQD PER ASSY — PARTS LIST

P	LTR	REVISION RECORD	DATE	DWN	APVD
	C1	ECR−13−008359	5−2013	MY	TE

DIMENSIONS: INCHES
TOLERANCES UNLESS OTHERWISE SPECIFIED: 0 PLC ± – ; 1 PLC ± – ; 2 PLC ± – ; 3 PLC ± – ; 4 PLC ± –
ANGLES ± –
SURFACE TEXTURE √

DWN L.LOFTHOUSE 15MAR05
CHK –
APVD F.BACKHURST 15MAR05
NAME FINE ADJ SIDE FD HD−I APPL
MATERIAL – – –
HEAT TREAT – – –
TE Connectivity
SCALE – SIZE A1 DRAWING NO 1528520 SHEET 1 OF 1 REV C1

CUSTOMER ACCESSIBLE PRODUCTION DRAWING

THIS INFORMATION IS CONFIDENTIAL AND PROPRIETARY TO TYCO ELECTRONICS CORPORATION AND ITS WORLDWIDE SUBSIDIARIES AND AFFILIATES (COLLECTIVELY "TE"). IT MAY BE DISCLOSED ONLY TO THOSE THAN TE PERSONNEL, WITHOUT AUTHORIZATION FROM TE (www.TE.com).

3308−8 (3/11)