used for: DIN 41617

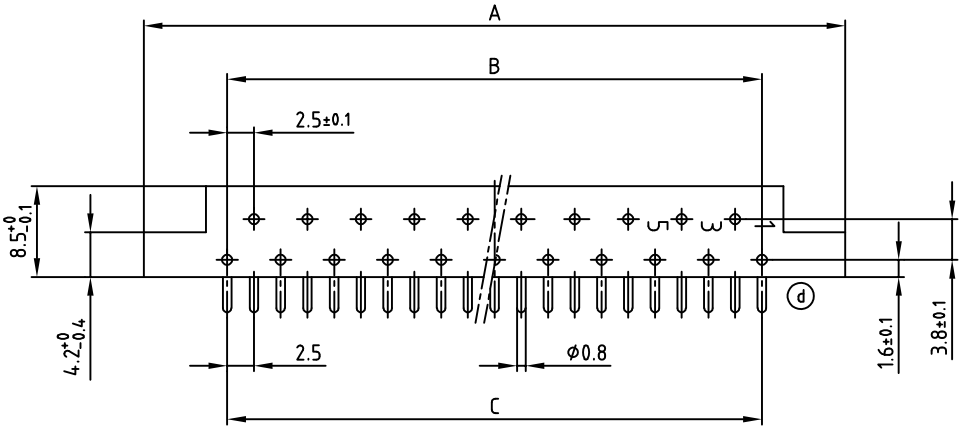

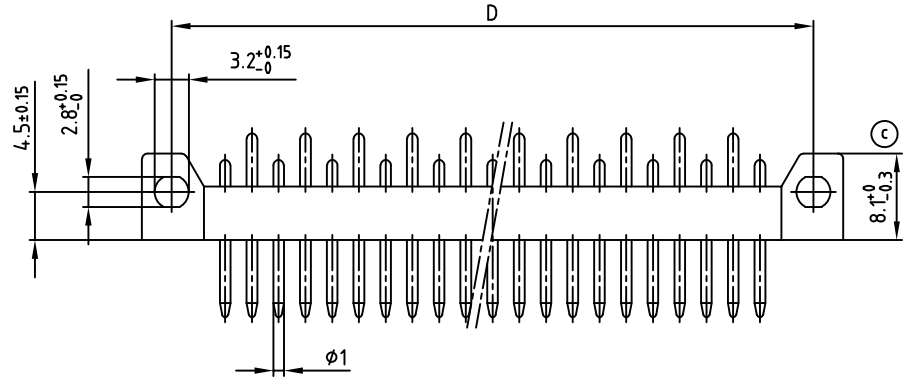

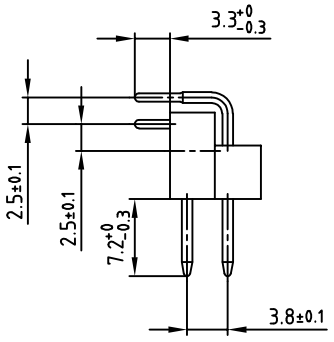

b

Polzahl No. of pos.	A ±0.2	B ±0.1	C ±0.1	D ±0.1	Art.-Nr. Part-No
13	45.6	12x2.5=30	12x2.5=30	40	101A10079X
21	65.6	20x2.5=50	20x2.5=50	60	101A10099X
31	90.6	30x2.5=75	30x2.5=75	85	101A10119X

NOTES:
1. INSULATOR: PC GF UL 94 V-1, GREY
2. CONTACTS: COPPER ALLOY
   PLATING: GOLD OVER NICKEL
   50 MATING CYCLES
3. CONNECTOR IS PART MARKED: PART-NO CONEC ABC (b)

P.C.B. HOLE DRILLINGS

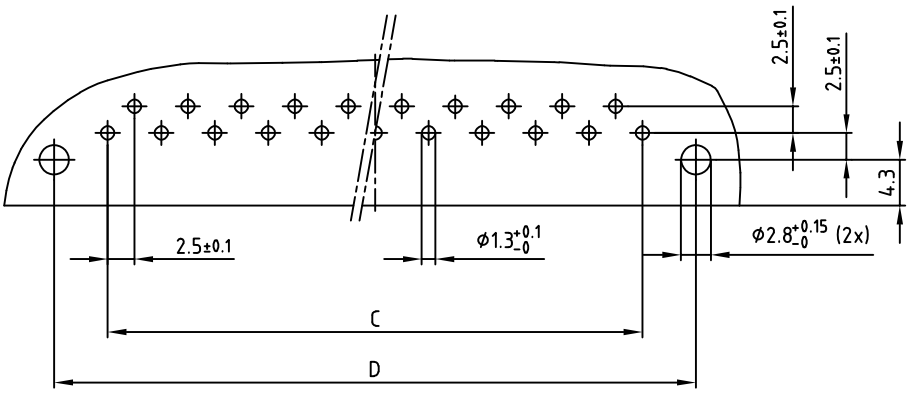

RoHS compliant

APPROVAL # FREIGABE # DEBLOCAGE # AUTORIZACION # APPROVAL
CUSTOMER APPROVAL DATE:
NAME: TITLE:
COMPANY NAME:

THIS DRAWING MAY NOT BE COPIED OR REPRODUCED IN ANY WAY, AND MAY NOT BE PASSED ON TO A THIRD PARTY WITHOUT WRITTEN PERMISSION. OWNERSHIP AND COPYRIGHT OF CONEC GmbH
DO NOT ALTER CAD DRAWING BY HAND

rev.	description	date	name
1 x d	Ä23-0990	23.06.2023	JLE
1 x c	Ä4688	15.03.2013	E.Mick.
3 x b	Ä3087	21.08.2008	Sonne
a	Origin		

tolerance: dim. in mm

2006	date	name
drawn	15.11	Schwenkler
appd.	16.11	Lehmenkühler
norm	DIN 41617	
d-old		

CONEC®

scale: 2:1
material: SEE NOTES
title: MALE CONNECTOR
(b) 13pos.-31pos. / 2.5mm
with angled solder pins
dwg no: 10K1A014
AutoCAD 2006 | DIN-A 3 | sh: 1/1
part no: SEE TABLE (b)