THIS DRAWING IS UNPUBLISHED. RELEASED FOR PUBLICATION
© COPYRIGHT - BY TYCO ELECTRONICS CORPORATION ALL RIGHTS RESERVED.

| LAST | DIST |
|---|---|
| CM | 00 |

REVISIONS

| REV | LTR | DESCRIPTION | DATE | DRN | APVD |
|---|---|---|---|---|---|
| | O | EC 0038 1108 04 | 04OCT05 | BSV | DB |

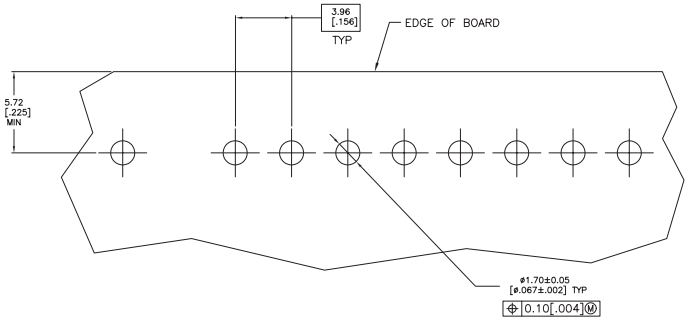


10 RECOMMENDED MOUNTING HOLE PATTERN FOR 1.57 [.062] THICK P.C. BOARD

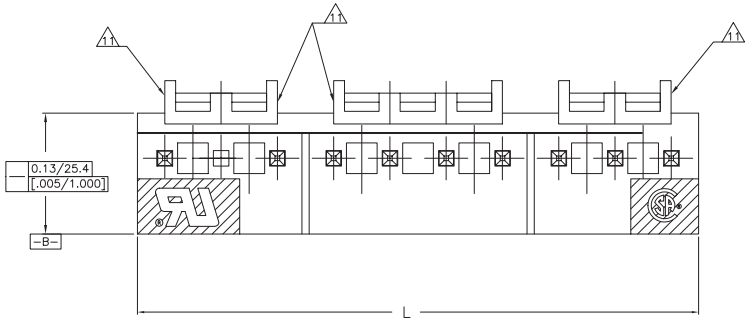


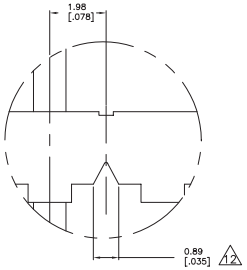


DETAIL A
SCALE 16:1

1. MATERIAL
HOUSING: THERMOPLASTIC POLYESTER, GLASS FILLED DR-48, UL94V-0.
POST: COPPER ALLOY

2. FINISH
HOUSING: BLACK
POST: MATTE TIN PLATE, 0.00380-0.00880 [.000150-.000350] THICK OVER NICKEL UNDERPLATE, 0.00130 [.000050] MINIMUM THICK.

3. THIS PART IS ROHS/ELV COMPLIANT.

4. POST SOLDERTAILS COMPLY WITH TYCO SOLDERABILITY SPECIFICATION 109-11-2.

5. POST WITHSTANDS 13.34 NEWTONS (3 LBS) MINIMUM AXIAL FORCE IN EITHER DIRECTION WITHOUT DISLODGING.

6. APPLIES AT -C-

7. APPLIES WHEN THE HEADER IS STRAIGHT.

8. PLASTIC PROJECTIONS PERMITTED IN THIS ZONE.

9. COORDINATE DIMENSIONS APPLIES FROM CENTER OF THE ACTUAL FEATURE.

10. SOLDER SIDE OF BOARD IS SHOWN.

11. EDGE OF POLARIZING LOCK WALL TO BE IN LINE WITH CENTERLINE OF ADJACENT POST WITHIN ±0.13 [.005].

12. NOTCH SHOWN MAY OR MAY NOT APPEAR.

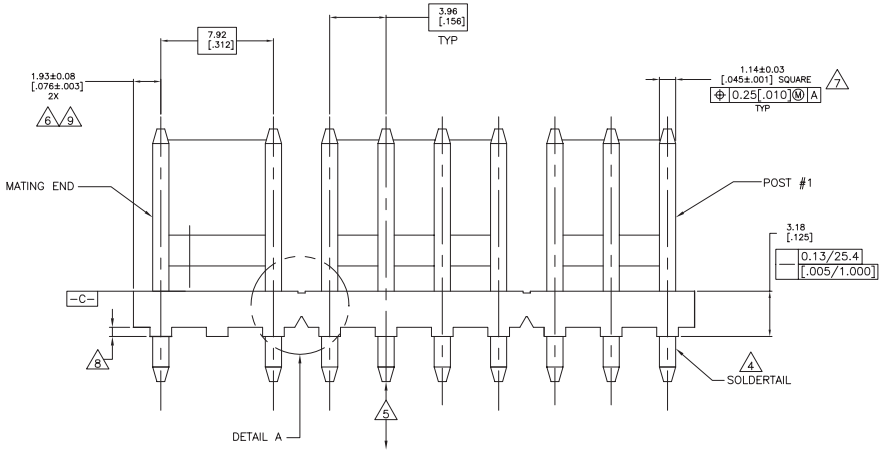


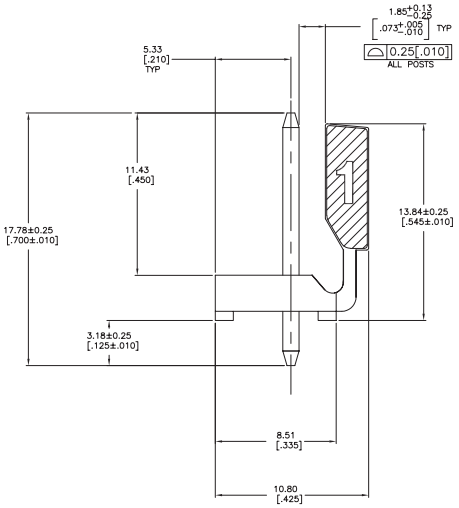


METRIC

| 3&4 | 7&8 | 39.50 [1.555] | 10 | 1-1744099-0 |
|---|---|---|---|---|
| BACK WALL INTERRUPTIONS BETWEEN POSTS | | L | NO. OF POSTIONS | PART NUMBER |

THIS DRAWING IS A CONTROLLED DOCUMENT.

DIMENSIONS: mm [INCHES]

CHANGES MADE UNLESS SPECIFIED: 0 PLC ± – ; 1 PLC ± – ; 2 PLC ± 0.13 [.005] ; 3 PLC ± – ; ANGLES ± –

MATERIAL 1 FINISH 2

| | | |
|---|---|---|
| DRN S. HOOVER | 23SEP04 | Tyco Electronics Corporation Harrisburg, PA 17105-3608 |
| CHK H. BOSSI | 23SEP04 | |
| APVD D. BOSSI | 23SEP04 | MTA-.156 HEADER ASSEMBLY, FRICTION LOCK, STRAIGHT .045 SQUARE POST, TIN PLATED, POLARIZED LOCK, OMITTED POST #9 |
| PRODUCT SPEC – | | |
| APPLICATION SPEC – | | SIZE A0 / CAGE CODE 00779 / DRAWING NO C-1744099 / RESTRICTED TO – |
| WEIGHT – | | |
| CUSTOMER DRAWING | | SCALE 6:1 / SHEET 1 OF 1 / REV O |