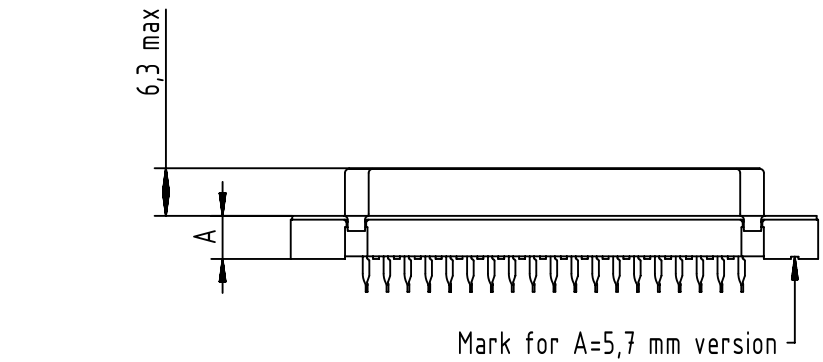

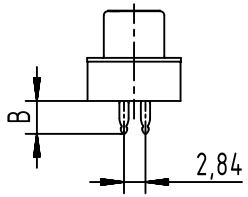

PC-Board layout
view component side
thcikness up to 3,2 mm

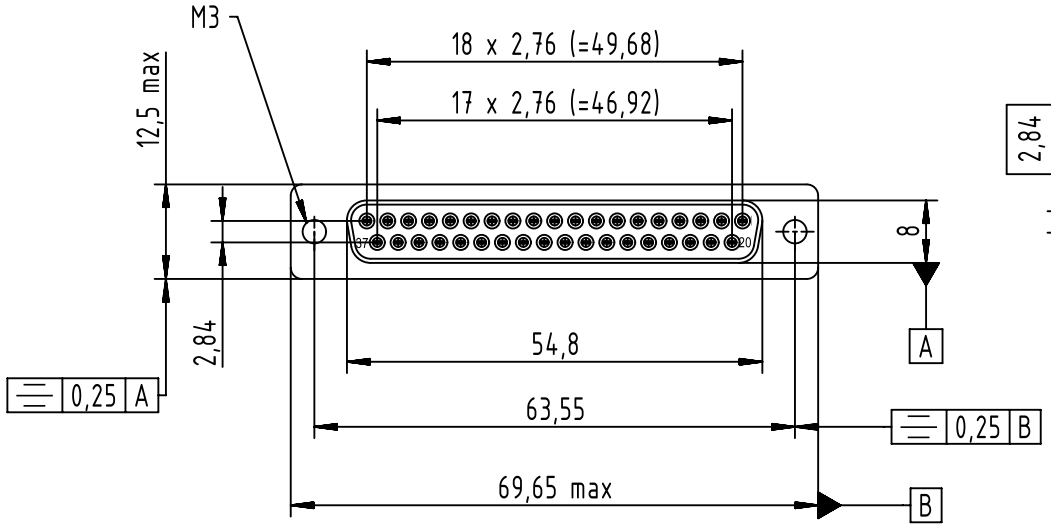

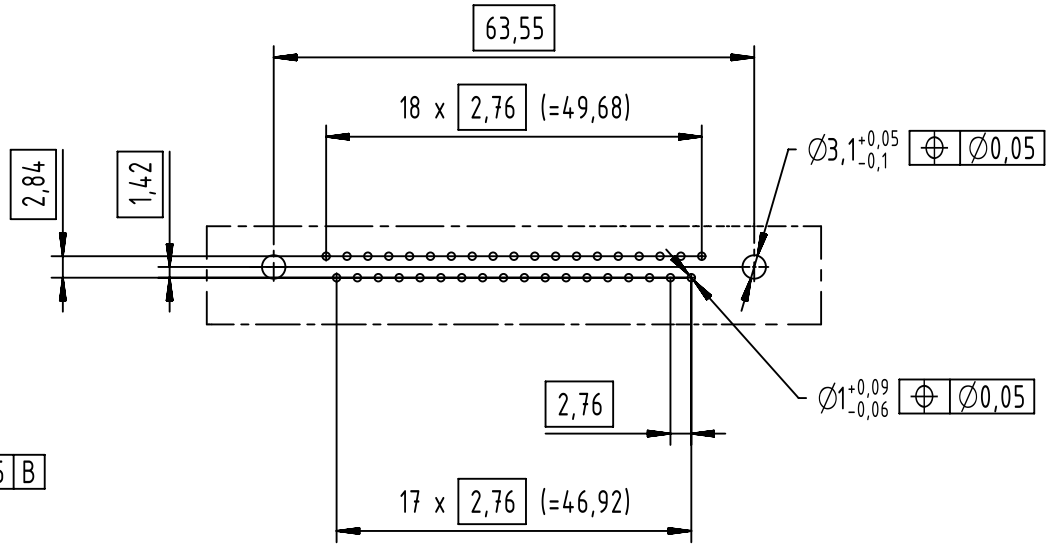

09664147501	3	6	4,20
09664146501	2	6	4,20
09664145501	S4 PdNi	6	4,20
Part number	performance level	A +/- 0,2	B +/- 0,2

All Dimensions in mm
Original Size DIN A4

Scale 1:1

Free size tol.

Ref.

Sub.

All rights reserved

Department EC PD - FR

HARTING Electronics GmbH
D-32339 Espelkamp

Created by	Inspected by	Standardisation	Date	State
LAVERGNEC	BAGDIKIAN	HOFFMANN	2014-04-02	Final Release

Title: D-Sub 37-pole female straight press-in

Doc-Key / ECM-Nr.
100571876/UGD/001/A
500000072779

Type: TB

Number: 0966414X501

Rev.: A

Page: 1/1

A4