DRAWING MADE IN AMERICAN PROJECTION

NUMBER C-165300-E

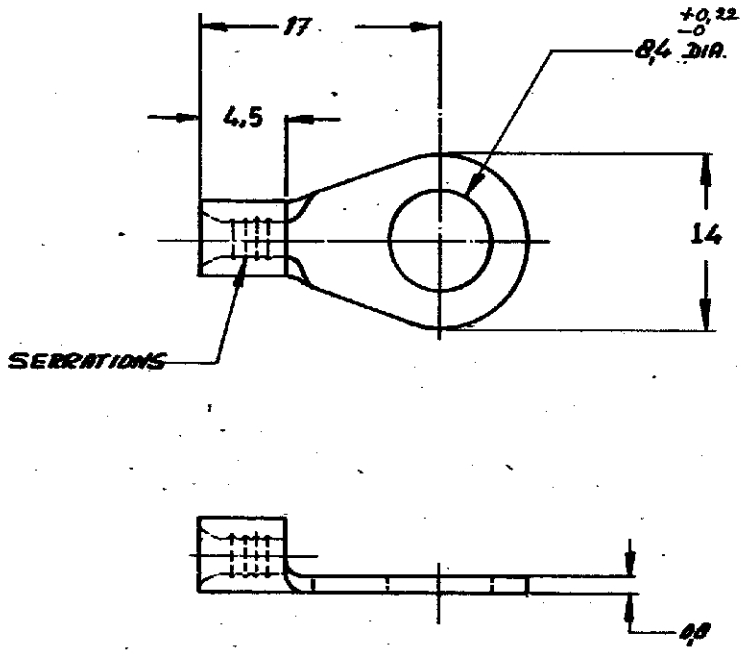

165300	COPPER	TINPLATED
ORDER NO.	MATERIAL	PLATING

DR R. DIKONDT. DATE 23/6-67 DSG DATE 25/10/10
CHK DATE APP DATE 25/9-67

DO NOT SCALE PRINT

DIMENSIONS IN MM.

CUSTOMER COPY FOR REFERENCE ONLY

©1967 BY AMP-HOLLAND N.V. ALL RIGHTS RESERVED A-MP PRODUCTS COVERED BY -PATENTS AND/OR PATENTS PENDING.

AMP

AMP-HOLLAND N.V.
'S-HERTOGENBOSCH
HOLLAND

WIRE-RANGE	INSUL.-RANGE	TYPE
1,5-2,5 mm²	—"—	-DIN- SOLISTRAND

SCALE	LOC	SIZE	NO	REV
—"—	H	A	C-165300-E	C

NAME RINGTONGUE stud: M8

AMP 12882