Units:mm

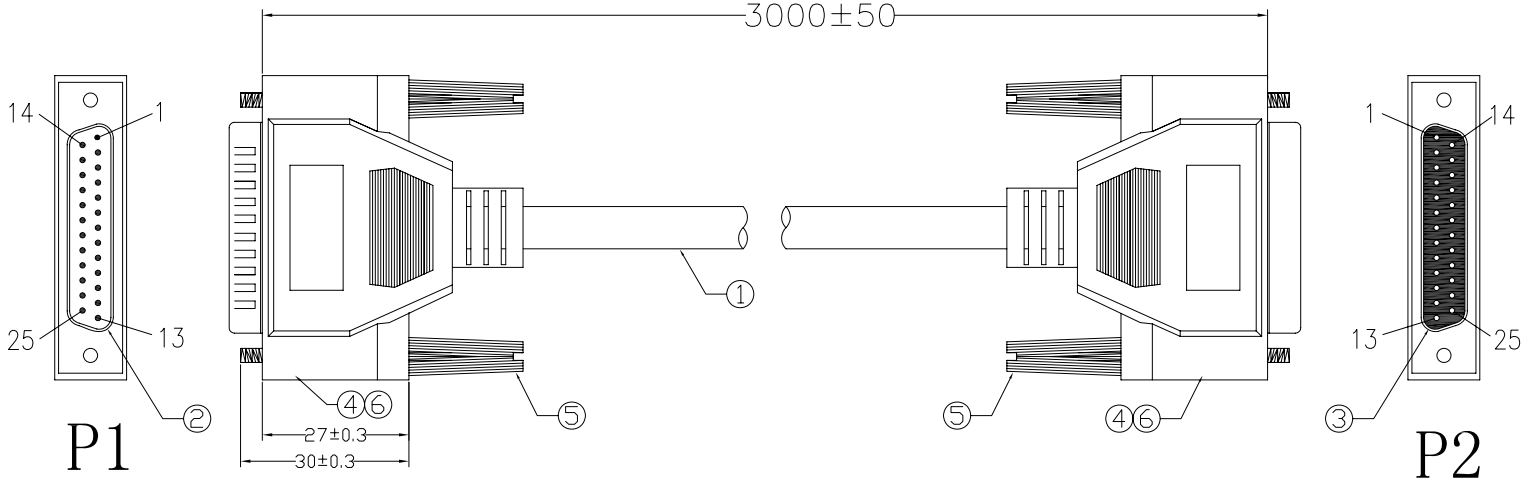

Electrical test:
1.100% short,open,miswire test
2.Conduct resistance:5 Ohm(max)
3.Insulation resistance:10Mohm(min)
4.dielectric test:DC 300V

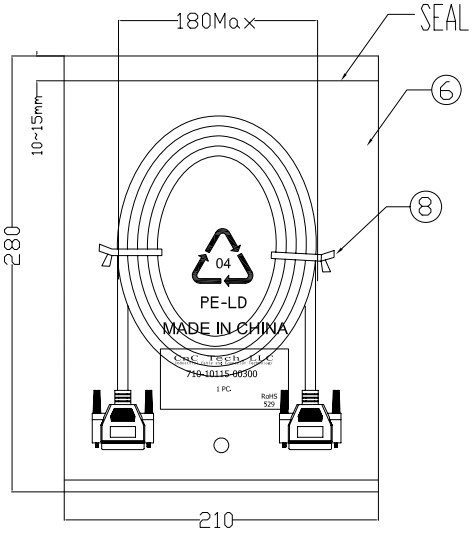

NO.	NAME	Q'TY	SPECIFICATION
⑨	TIE	2	WHITE L=120mm
⑧	PE BAG	1/5	CLEAR SIZE: 360*380*0.05mm PRINT BLACK"MADE IN CHINA"+"5PCS"及印生产周期,有透气孔.
⑦	PE BAG	1	CLEAR SIZE:210*280*0.05mm PRINT BLACK"MADE IN CHINA"+"1PC"及印生产周期,有透气孔.
⑥	TUBE	2	HEAT SHRINK TUBE BLACK OD1.5*20MM
⑤	SCREW	4	#4-40UNC TYPE L=30mm,NICKEL PLATED,MOLD:BEIGE(IV-29) ABS
④	IN JACKET	18g	CLEAR LD-PE (Mould NO.:NM-33)
	OUT JACKET	60g	BEIGE(IV-29) 40P PVC(Mould NO.WM-071)
③	CONN	1	DB 25P FEMALE SODER TYPE PIN G/F SHELL NI-PLATED INSULATOR COLOR:BLUE
②	CONN	1	DB 25P MALE SODER TYPE PIN G/F SHELL NI-PLATED INSULATOR COLOR:BLUE
①	CABLE	1	UL20276 28AWG(7/0.12TC)*18P+D(26AWGTC)+AL/MY+BRAID(85%) OD7.5mm JACKET:BEIGE(IV-29) L=3000±15mm.

PIN ASSIGNMENT

P1		P2
1	棕	1
18	棕/黑	18
2	红	2
19	红/黑	19
3	橙	3
19	橙/黑	19
4	黄	4
20	黄/黑	20
5	绿	5
20	绿/黑	20
6	蓝	6
21	蓝/黑	21
7	紫	7
21	紫/黑	21
8	白	8
22	白/黑	22
9	粉红	9
22	粉红/黑	22
10	棕/白	10
24	红/白	24
11	橙/白	11
23	黄/白	23
12	绿/白	12
24	蓝/白	24
13	紫/白	13
24	浅灰/白	24
14	红/棕	14
25	黄/棕	25
16	橙/棕	16
25	绿/棕	25
15	蓝/棕	15
23	紫/综	23
17	棕/红	17
25	浅灰/红	25
SHELL	DRAIN+BRAID	SHELL

CnC Tech, LLC

Industrial Cable and Connector Technology

DRAWED BY	ZHONGHS	DARWING NO.	
CHECKED BY		CUSTOMER	
APPROVAL BY		ITEM NO.	710-10115-00300
DECIDE BY		DATE	2012-02-16
VERSIONS/EDITEON	A/0	PROJECTION	