CUSTOMER SPECIFICATION DRAWING

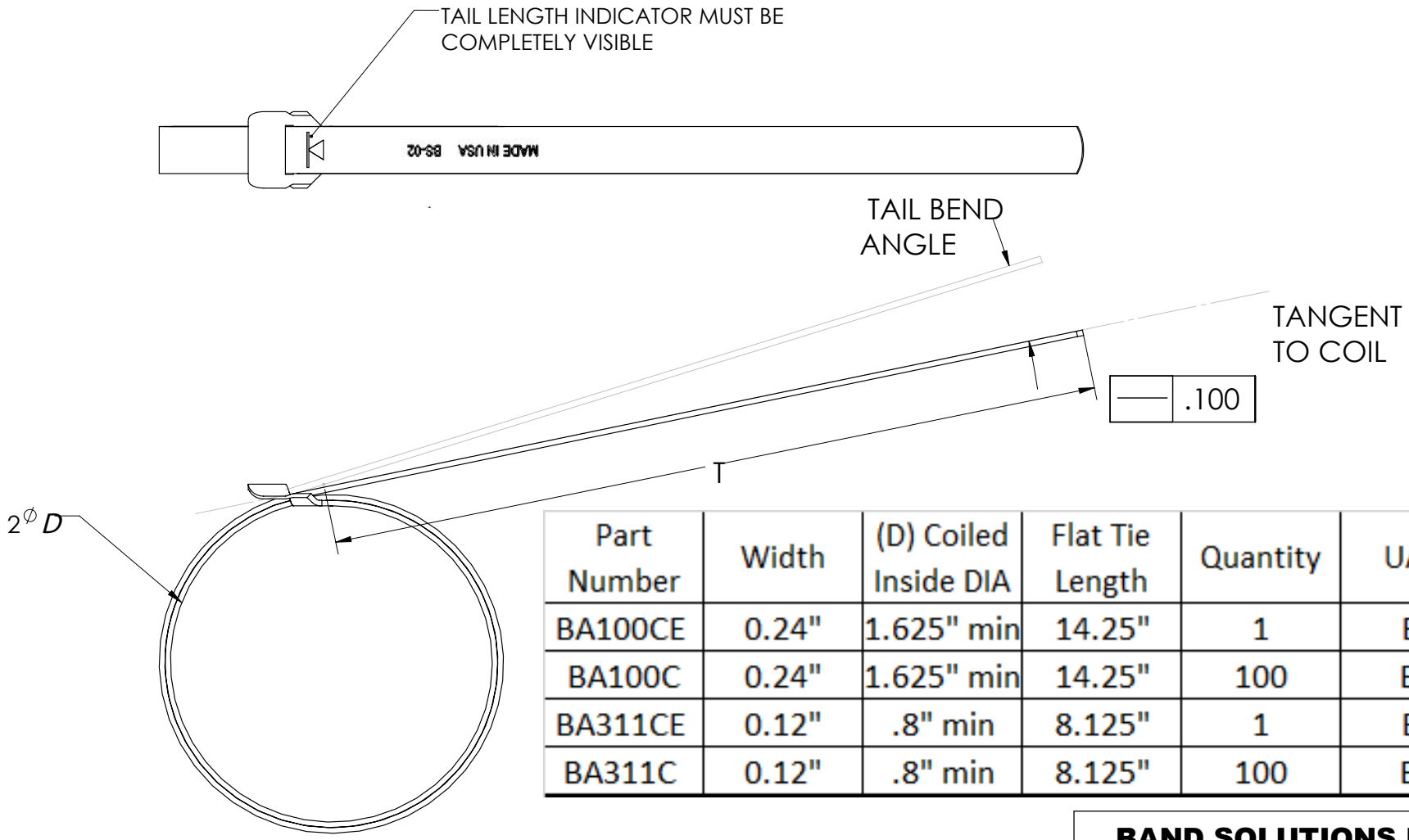

Part Number	Width	(D) Coiled Inside DIA	Flat Tie Length	Quantity	UAM
BA100CE	0.24"	1.625" min	14.25"	1	EA
BA100C	0.24"	1.625" min	14.25"	100	BG
BA311CE	0.12"	.8" min	8.125"	1	EA
BA311C	0.12"	.8" min	8.125"	100	BG

NOTES:
1. MATERIAL: 304 STAINLESS STEEL
2. FINISH: PASSIVATED
3. MATERIAL MEETS DFARS COMPLIANCE
4. PARTS MEET AEROSPACE STANDARD AS85049/128
5. ROHS COMPLIANT
6. DOUBLE WRAP USE ONLY

PROPRIETARY AND CONFIDENTIAL

THE INFORMATION CONTAINED IN THIS DRAWING IS THE SOLE PROPERTY OF BAND SOLUTIONS LLC. ANY REPRODUCTION IN PART OR AS A WHOLE WITHOUT THE WRITTEN PERMISSION OF BAND SOLUTIONS LLC IS PROHIBITED.

BAND SOLUTIONS LLC

TITLE:

EMR/RFI TERMINATION SHIELD-DEX COILED 304 SS

SIZE	DWG. NO.	REV
A	BA001	A

SCALE: 1:2 | WEIGHT: | SHEET 1 OF 1

5 4 3 2 1